PROGRAMMING MANUAL

EN

TGR2050 SERIES

1.5GHz & 3GHz

RF Signal Generators

1. CONTENTS

1.SAFETY 2

Symbols 2
Safety notices 3

2.INSTALLATION 4

Mounting 4
Ventilation 4
Handle/stand 4

3.ELECTRICAL REQUIREMENTS 5

Mains operating voltage 5
Mains lead 5

4.FRONT PANEL 6

Overview 6

5.REAR PANEL 8

Connections overview 8

6.MAINTENANCE 10

Cleaning 10

7.REMOTE OPERATION 11

Overview 11
Remote/ local operation 11
USB interface 11
LAN interface 13
LAN connection 13
GPIB interface 17

8.REMOTE COMMAND FORMAT 24

USB and LAN 24
GPIB 25

9.REMOTE CONTROL COMMANDS 26

SCPI Overview 26
SCPI subsystems 28
Parameter data formats 29

10. SCPI COMMAND LIST 30

Common commands 30
Query commands 32
SYSTem Subsystem commands 33
STATus Subsystem commands 36
SOURce Subsystem Commands 37
UNIT Subsystem commands 47
OUTPut Subsystem commands 48
TRIGger Subsystem commands 49
MMEMory Subsystem commands 50

11. LEGACY COMMANDS 51

Aim-TTi Legacy commands 51

12. FACTORY DEFAULT SETTINGS 52

1. SAFETY

Symbols

This instruction manual contains information and warnings which must be followed by the user to ensure safe operation and to retain the instrument in a safe condition.

The following symbols are displayed on the instrument and throughout the manual, to ensure the safety of the user and the instrument, all information must be read before proceeding.

WARNING

Indicates a hazard that, if not avoided, could result in injury or death.

CAUTION

Indicates a hazard that could damage the product that may result in loss of important data or invalidation of the warranty.

NOTE

Indicates a helpful tip

EXAMPLE

Indicates an example to show further details

⏻	**Standby Supply-** Instrument is not disconnected from AC mains power when switch is off.	CE	**'CE'** marking is a certification mark that affirms the goods conformity with European health, safety, and environmental protection standards.
~	**Alternating Current**	UK CA	**UKCA** 'UK Conformity Assessed' marking is a certification mark that affirms conformity with the applicable requirements for products sold within Great Britain.
⏚	**Earth (ground) Terminal**		WEEE (do not dispose in household waste)
⏚	**Terminal connected to chassis ground**		**Protective Earth Terminal**

Safety notices

This instrument is:

- A safety Class I instrument according to IEC classification and has been designed to meet the requirements of EN61010-1 (Safety Requirements for Electrical Equipment for Measurement, Control and Laboratory Use).
- An Installation Category II instrument intended for operation from a normal single-phase supply.
- Tested in accordance with EN61010-1 and has been supplied in a safe condition.
- Designed for indoor use in a Pollution Degree 2 environment in the temperature range 5°C to 40°C, 20% - 80% RH (non-condensing).

WARNING

Do not operate while condensation is present.

Do not operate outside its rated supply voltages or environmental range.

THIS INSTRUMENT MUST BE EARTHED.

Any interruption of the mains earth connector, inside or outside, will make the instrument dangerous. Intentional interruption is prohibited.

Any adjustment, maintenance and repair of the opened instrument under voltage must be avoided.

When connected, terminals may be live and opening the covers or removal of parts (except those that can be accessed by hand) may expose live parts.

To avoid electric shock, or damage to the instrument, never allow water to get inside the case.

If the instrument is clearly defective, has been subject to mechanical damage, excessive moisture or chemical corrosion the safety protection may be impaired and it must be withdrawn from use and returned for repair.

Ensure that only fuses with the required rated current and of the specified type are used for replacement. The use of makeshift fuses and the short-circuiting of fuse holders is prohibited.

This instrument uses a Lithium button cell for non-volatile memory battery back-up; typical life is 5 years. In the event of replacement becoming necessary, replace only with a cell of the correct type, i.e. 3V Li/MnO_2 20mm button cell type 2032. Exhausted cells must be disposed of carefully in accordance with local regulations; do not cut open, incinerate, expose to temperatures above 60°C or attempt to recharge.

CAUTION

Do not enable output without a connected load. Output stage damage may occur if the output exceeds (-)23 dBm without a load.
Do not wet when cleaning, use only a soft dry cloth to clean the screen.

2. INSTALLATION

Mounting

This instrument is suitable for bench use and rack mounting.

For rack mounting the protective bezels and handle/stand should be removed such that the instrument can be fitted beside any other standard 2U half-rack instrument in a 19” rack. A suitable 2U 19” rack kit is available from the manufacturers or their overseas agents.

See rack mount instructions for details on how to remove the protective bezel and handle.

Ventilation

The instrument uses a fan fitted to the rear panel. Take care not to restrict the rear air exit or the inlet vents at the front (sides and underneath). In rack-mounted situations allow adequate space around the instrument and/or use a fan tray for forced cooling.

Handle/stand

The instrument is fitted with a 4-position handle/stand. Pull out both sides of the handle at the case pivot points to free the position locking pegs and rotate the handle from the stowed position to the required stand or handle position. Release the sides of the handle to lock it in the new position.

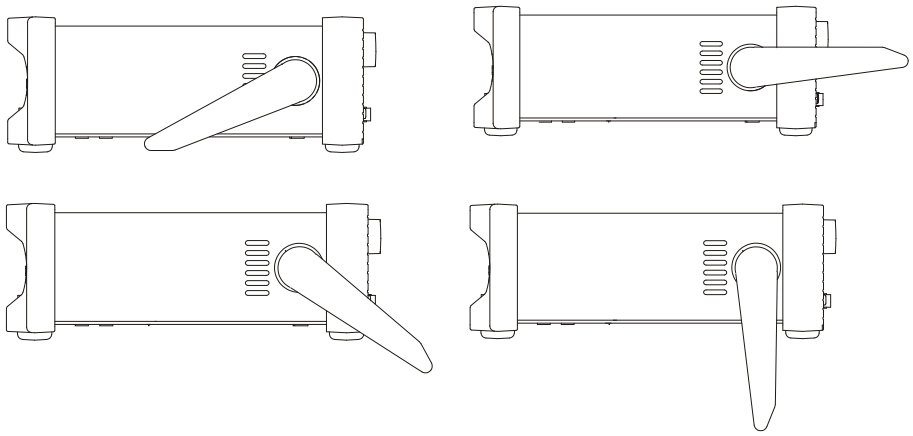

3. ELECTRICAL REQUIREMENTS

Mains operating voltage

This instrument has a universal input range and will operate from a nominal 115V or 230V mains supply without adjustment. Check that the local supply meets the AC input requirement given in the Specification.

Mains lead

Connect the instrument to the AC supply using the mains lead provided.

Should a mains plug be required for a different mains outlet socket, a suitably rated and approved mains lead set should be used which is fitted with the required wall plug and an IEC60320 C13 connector for the instrument end.

To determine the minimum current rating of the lead-set for the intended AC supply, refer to the power rating information on the equipment or in the Specification.

WARNING

THIS INSTRUMENT MUST BE EARTHED.

Any interruption of the mains earth conductor inside or outside the instrument will make the instrument dangerous. Intentional interruption is prohibited.

Before use, inspect provided mains lead for any signs of damage. Do not use if lead is damaged.

Before use, inspect the instrument for any signs of damage. Do not use if damaged.

4. FRONT PANEL

Overview

① Flash drive

This is a USB Host port for the connection of flash drive which conform to the Mass Storage Class specification. FAT16 or FAT32 filing systems are accepted. .bmp files of the display can be captured and exported using the flash drive port, see Print Screen' for more details

② Colour touch screen display

CAUTION

Do not use sharp or pointed objects to operate the touch screen

③ Standby button

Illuminated when in standby. Press and hold to turn instrument on, quick press to turn off.

④ Parameter keys

FREQ (frequency) and AMP (amplitude)- select the requested parameter for editing. These keys also return to the home screen.

Mode keys

MOD (modulation) or SWEEP menus, they become illuminated only when the mode is activated ie. modulation is 'ENABLED' or sweep is 'RUN'.

Menu keys

STORES key allows access to files saved in the built-in storage and to a connected flash drive.

UTILITY key gives access to menus for a variety of functions such as: Instrument and System settings, Remote Interface settings, Calibration, IQ Trim and more.

Trigger key

TRIGGER key is used to issue a manual trigger signal.

⑤ Numeric keypad

Numeric keys permit direct entry of a value for the parameter currently selected.

⑥ RF Output Port

This is a 50Ω N-type output socket. The maximum output is 1Vrms (+13dBm) into 50Ω. It can tolerate a short circuit indefinitely. Protected against accidental connection of up to 50VDC.

NOTE

The N Type connector is a precision component that should be protected z excessive wear to ensure that its RF characteristics (impedance and VSWR) are accurately maintained. If the instrument is used in a manner that demands many connections/disconnections to and from the RF OUT it is good practice to fit a male–to–female adaptor to the socket which can be replaced periodically.

CAUTION

Do not apply external voltages to the RF output port. Do not enable output without a connected load. Output stage damage may occur if the output exceeds (-)23 dBm without a load.

⑦ RF output key

The OUTPUT key switches the RF Output Port on or off. The key becomes illuminated when the output is on.

⑧ Escape Key/ Local

Entry can be abandoned at any point by pressing the escape key, this key will also exit the selection or screen currently selected. Additionally, this key is used to return to local from I/O.

⑨ Directional keys

The direction keys are used for navigating parameter windows, scrolling numeric parameter values and selection lists, additionally these keys are used to apply step changes to the frequency and amplitude.

⑩ Rotary knob

The rotary knob is used to navigate the user interface, it features a ‘press’ function to select an option. See ‘Rotary knob principles’ for more details.

5. REAR PANEL

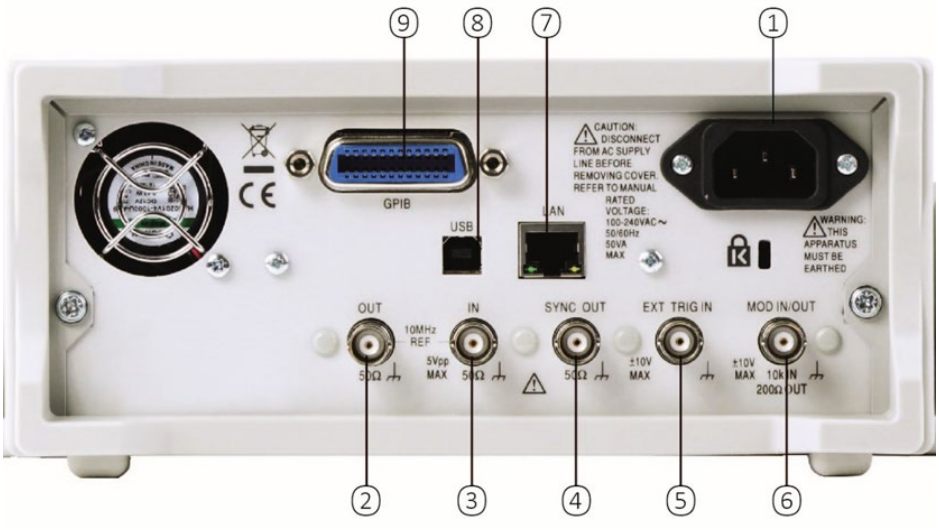

Connections overview

① AC power inlet

② Internal reference out

Internal reference out: 10MHz, >2Vpp into 50Ω

CAUTION

Do not apply external voltages to this output.

③ External reference in

External Reference In: 10MHz, 2-5Vpp from 50Ω

CAUTION

Do not apply external voltages exceeding 5Vpp to this socket.

④ Sync out

Automatically selected to be either Modulation Sync or Sweep Sync.

Output impedance 50Ω nominal. Logic levels of <0.8V & >3V unloaded.

SYNC will withstand a short circuit to ground.

CAUTION

Do not apply external voltages to this output.

⑤ External trigger in

DC coupled External Trigger Input signal, nominal threshold 1.65V

CAUTION

Do not apply external voltages exceeding ±10V to this socket.

⑥ Mod in/out

Analogue MOD IN, AC coupled 10kΩ input impedance, 1Vp-p full scale. Analogue MOD OUT, DC coupled 150Ω source impedance, 2Vp-p full scale unloaded. Digital MOD IN, DC coupled 10kΩ input impedance, nominal threshold of +1.65V. Digital MOD OUT, DC coupled 150Ω source impedance, logic levels of <0.8V & >3V unloaded.

CAUTION

Do not apply external voltages exceeding ±10V to this socket.

⑦ LAN

The LAN interface is designed to meet the LXI standard version 1.5 LXI Device Specification 2016.
Remote control using the LAN interface is possible using the TCP/IP Socket protocol.

⑧ USB

The USB port accepts a standard USB cable. If the USB driver has been installed from the website, the Windows plug-and-play function should automatically recognise that the instrument has been connected. See the support page on the website for information on installing the driver on a PC at www.aimtti.com .

⑨ GPIB / IEEE-488 (optional)

The default GPIB address is 11.

6. MAINTENANCE

The manufacturers or their agents overseas will provide a repair service for any unit developing a fault. Where owners wish to undertake their own maintenance work, this should only be done by skilled personnel in conjunction with the service guide which may be obtained directly from the Manufacturers or their agents overseas.

Cleaning

If the instrument requires cleaning, use a cloth that is only lightly dampened with water or a mild detergent.

WARNING

To avoid electric shock, or damage to the instrument, never allow water to get inside the case. To avoid damage to the case never clean with solvents.

7. REMOTE OPERATION

Overview

The instrument can be remotely controlled via its USB, LAN or (optional) GPIB interfaces.

USB remote control operates in a similar way to an RS232 interface but via the USB connector.

Software supplied with the instrument sets up the controlling computer to treat the USB connection as a virtual COM port.

Application software on the computer can then access the instrument via that COM port.

The LAN interface is designed to meet 1.5 LXI Device Specification 2016.

Remote control using the LAN interface is possible using the TCP/IP Sockets protocol. The instrument also contains a basic Web server which provides information on the instrument and allows it to be configured from a web browser. Simple command line control from the browser is also possible.

The instrument is supplied with USB and LAN as standard; GPIB is an option.

Remote/ local operation

At power-on the instrument will be in the local state and the REM indicator is not displayed on the Status Line. In this state, all front panel operations are possible.

When the instrument receives a command from an interface the remote state will be entered and the REM indicator will be displayed on the Status Line. In this state the front panel user interface can still be navigated but no changes to parameters are possible.

The instrument may be returned to the local state by pressing the LOCAL key; however, the effect of this action will only remain until the instrument receives another character from the interface, when the remote state will once again be entered. Returning to Local by this action will keep the settings at their last remotely set values.

USB interface

Using the USB interface for remote control requires a Communications Device Class driver on the PC to provide a virtual COM port instance.

Windows 10 will automatically install a suitable driver. In earlier versions of Windows a suitable driver is provided by Microsoft, but it is not installed by default. The data (.INF) file to control the installation is provided on the website: www.aimtti.com

If required, unzip the contents of the downloaded USB driver.

NOTE

The same driver is also used by many other instruments from this manufacturer and may already be known to the PC.

Installing USB driver for the first time

To install the driver for the first time:

- First switch the unit on
- Then connect the USB port to the PC.

NOTE

In Windows 10, the driver is automatically installed by the operating system.

The Windows plug and play functions should automatically recognise the attachment of new hardware to the USB interface and (possibly after searching the internet for some time) prompt for the location of a suitable driver. Follow the Windows prompts and point to the downloaded driver file named USB_ARM_VCP_xxx.INF, where xxx is a version number.

In some cases, Windows will not complete this procedure (especially recent versions which search the internet first, looking for the unique Vendor ID and Product ID), in which case the instrument will show in Device Manager as “not working properly”. If this happens, select this device, right click and choose “update driver software...” and then “browse this computer for driver software...” and then locate the downloaded .INF file.

Once Windows has installed the device driver it will assign a COM port number to this particular unit. This number will depend on previous COM port assignments on this PC, and it may be necessary to use Device Manager to discover it. Each instrument has a unique USB identifier which is remembered by the system, so it will receive the same COM port number whenever it is attached to the same PC (regardless of the physical interface socket used), even though the COM port will disappear while the instrument is disconnected or switched off. Other instruments will receive different COM port numbers.

NOTE

A different PC will not necessarily assign the same COM port number to a particular instrument (it depends on the history of installations) Device Manager can be used to change the assignments given.

This virtual COM port can be driven by Windows applications (including a terminal emulator) in exactly the same way as any standard COM port, except that the Baud rate and other settings are unnecessary and are ignored. Some old applications might not function with COM port numbers 3 or 4, or above 9. In this case, use Device Manager to change the allocation given. Once it is installed, the driver will be maintained by Windows Update in the usual way.

LAN interface

The LAN interface is designed to comply with the LXI standard version 1.5 LXI Device Specification 2016 and contains the interfaces and protocols described below.

Since it is possible to misconfigure the LAN interface, making it impossible to communicate with the instrument over LAN, a LAN Configuration Initialise (LCI) mechanism is provided via the menus from the front panel to reset the instrument's interfaces to the factory default.

The default setting is for the instrument to attempt to obtain settings via DHCP if available or, if DHCP times out (30 seconds), via Auto-IP.

In the very unlikely event that an Auto-IP address cannot be found a static IP address of 192.168.1.100 is assigned. Resetting the LAN removes any password protection which has been set on the web page.

To reset the LAN interface, touch the Lan Reset button on the [Utility] > I/O menu.

For more information on LXI standards refer to www.lxistandard.org

LAN connection

To use the LAN interface, the IP address or the host name of the instrument must be known.

The assigned IP address of the instrument may be determined from the front panel controls by pressing the [Utility] key followed by touching the I/O button.

Then select LAN Status and the assigned IP settings will be shown on the second page of the displayed menu.

Alternatively, Windows PC software tools such as the LXI Discovery Tool may be used find all LXI compliant devices on the network. The latest version of the LXI Discovery Tool can be downloaded from www.lxistandard.org.

Note that older versions of the LXI Discovery Tool may not find this instrument as they only support the legacy VXI-11 protocol which is not implemented in this instrument.

Connecting via a router is recommended as this is significantly quicker to assign an IP address; connecting directly to the PC will begin to assign an IP address only after a 30 second DHCP time-out. Double clicking on any entry in the list of devices discovered will open the PC's web browser and display the Home page of that device.

There are also tools for LAN discovery included as part of the National Instruments Measurement and Automation Explorer package and the Keysight (formerly Agilent) Vee application.

The unit will, when first powered up, attempt to obtain settings via DHCP if available or, if DHCP times out (30 seconds), via Auto-IP. In the very unlikely event that an Auto-IP address cannot be found a static IP address of 192.168.1.100 is assigned. During this time the LAN indicator will keep flashing and change to if a LAN connection is successfully made. However, if a connection is still not made by the end of the above process, or if the LAN connector is physically removed at any time, the LAN field in the status line will change to ; see 'LAN error' section for details.

Web server; configuration password protection

The unit contains a basic web server. This provides information on the instrument and allows it to be configured. The Settings page can be password protected to deter unauthorised changes to the remote operation configuration.

NOTE

The default configuration page password is blank (no password).

The Settings page itself explains how to set the password. The password can be up to 15 characters long; the User Name should be left blank. The password will, however, be reset to the default (no password) if the front panel is used to reset all the LAN parameters to their factory default.

The web pages also have an 'Identify' function which allows the user to send an identifying command to the instrument which causes its display to flash until the command is cancelled.

ICMP ping server

The unit contains an ICMP server allowing the instrument to be 'pinged' via either its host name or IP address.

mDNS and DNS-SD support

Multicast DNS provides DNS services even on networks without a central DNS server (or DHCP server). This simplifies the setting up of a simple LAN using meaningful hostnames instead of a raw IP address. With service discovery it becomes straightforward for the device to be discovered and the services it provides.

The services provided by the instrument are http (_http._tcp) , lxi (_lxi._tcp) and scpi-raw (_scpi-raw._tcp).

VISA resource name

The instrument must be referred to by its raw socket information when used in software packages which communicate via a VISA resource name. For example, an instrument at IP address 192.168.1.100 would normally have a VISA resource name of "TCPIP0::192.168.1.100::inst0::INSTR" but for this instrument the name must be modified to read "TCPIP0::192.168.1.100::5025::SOCKET" where 5025 is the scpi-raw TCP port used by this instrument for control and monitoring.

XML identification document URL

As required by the LXI Standard, the instrument provides an XML identification document that can be queried via a GET at "http:<hostname>:80/lxi/identification" that conforms to the LXI XSD Schema (available at http:www.lxistandard.org/InstrumentIdentification/1.0) and the W3C XML Schema Standards (http:www.w3.org/XML/Schema). This document describes the instrument.

TCP sockets

The instrument uses 1 socket on TCP port 5025 for instrument control and monitoring. Text commands are sent to this port as defined in the 'Remote Control Commands' section and any replies are returned via the same port. Commands may be separated with either semicolons ";" or line feeds.

LAN error

If a LAN connection is made but an error is detected (e.g. the IP address is the same as another device on the network) then the LAN field in the status line will show until the error is corrected.

If a LAN error occurs; check and correct the configuration of the instrument; To reset the LAN interface touch the LAN Reset button on the [Utility] > I/O menu. The default setting is for the instrument to attempt to obtain settings via DHCP if available or, if DHCP times out (30 seconds), via Auto-IP. In the very unlikely event that an Auto-IP address cannot be found a static IP address of 192.168.1.100 is assigned. If no physical LAN connection is found at any time the LAN field in the status line will show

LAN

The LAN field in the Status Line can show multiple status indications:

- There is no LAN connection, for example no cable connected.
- Successfully connected.
- (Flashing icon) Configuring LAN connection.
- Unsuccessful attempt to connect.

GPIB interface

The GPIB interface 24-way connector is located on the instrument rear panel. The pin connections are as specified in IEEE Std. 488.1-1987 and the instruments in the range complies with IEEE Std. 488.1-1987 and IEEE Std. 488.2-1987 and contain the following IEEE 488.1 subsets.

GPIB subsets

This instrument contains the following IEEE 488.1 subsets:

Source Handshake	SH1
Acceptor Handshake	AH1
Talker	T6
Listener	L4
Service Request	SR1
Remote Local	RL2
Parallel Poll	PP1
Device Clear	DC1
Device Trigger	DT0
Controller	C0
Electrical Interface	E2

GPIB IEEE Std. 488.2 error handling – Query error register

The IEEE 488.2 UNTERMINATED error (addressed to talk with nothing to say) is handled as follows. If the instrument is addressed to talk and the response formatter is inactive and the input queue is empty then the UNTERMINATED error is generated. This will cause the Query Error bit to be set in the Standard Event Status Register, a value of 3 to be placed in the Query Error Register and the parser to be reset. See 'Status reporting' section for further information.

The IEEE 488.2 INTERRUPTED error is handled as follows. If the response formatter is waiting to send a response message and a <PROGRAM MESSAGE TERMINATOR> has been read by the parser or the input queue contains more than one END message then the instrument has been INTERRUPTED and an error is generated. This will cause the Query Error bit to be set in the Standard Event Status Register, a value of 1 to be placed in the Query Error Register and the response formatter to be reset thus clearing the output queue. The parser will then start parsing the next <PROGRAM MESSAGE UNIT> from the input queue. See 'Status reporting' section for further information.

The IEEE 488.2 DEADLOCK error is handled as follows. If the response formatter is waiting to send a response message and the input queue becomes full then the instrument enters the DEADLOCK state and an error is generated. This will cause the Query Error bit to be set in the Standard Event Status Register, a value of 2 to be placed in the Query Error Register and the response formatter to be reset thus clearing the output queue. The parser will then start parsing the next <PROGRAM MESSAGE UNIT> from the input queue. See 'Status reporting' section for further information.

GPIB parallel poll

Complete parallel poll capabilities are offered on this instrument. The Parallel Poll Enable Register is set to specify which bits in the Status Byte Register are to be used to form the ist local message The Parallel Poll Enable Register is set by the *PRE <nrf> command and read by the *PRE? command. The value in the Parallel Poll Enable Register is ANDed with the Status Byte Register; if the result is zero then the value of ist is 0 otherwise the value of ist is 1.

Bit 7 =	X	don't care
Bit 6 =	1	Parallel poll enable
Bit 5 =	1	
Bit 4 =	0	
Bit 3 =	Sense	sense of the response bit; 0 = low, 1 = high
Bit 2 =	?	bit position of the response
Bit 1 =	?	
Bit 0 =	?	

The instrument must also be configured so that the value of ist can be returned to the controller during a parallel poll operation. The instrument is configured by the controller sending a Parallel Poll Configure command (PPC) followed by a Parallel Poll Enable command (PPE). The bits in the PPE command are shown in the following table:

EXAMPLE

To return the RQS bit (bit 6 of the Status Byte Register) as a 1 when true and a 0 when false in bit position 1 in response to a parallel poll operation send the following commands

*PRE 64<pmt>, then PPC followed by 69H (PPE)

The parallel poll response from the instrument will then be 00H if RQS is 0 and 01H if RQS is 1.

During parallel poll response the DIO interface lines are resistively terminated (passive termination). This allows multiple devices to share the same response bit position in either wired-AND or wired-OR configuration, see ‘GPIB interface’ for more information.

Status reporting

The standard status and error reporting model described in IEEE Std. 488.2 was designed for the GPIB interface and contains some features intended for use with the Service Request and Parallel Poll hardware capabilities of that interface, and to accommodate its semi-duplex operation. Although those facilities are of little use with other interfaces, this instrument makes the full set of capabilities available to all of the interfaces. All the remote interfaces share the same set of status and error registers.

The full set of error and status registers and the individual bits they contain is shown in the Status Model Diagram and described in detail below, but in brief the status is maintained using three primary registers, the Standard Event Status Register, the Operation Status Register and the Event/Error Queue Register.

Standard event status and standard event status enable registers

These two registers are implemented as required by the IEEE Std. 488.2.
Any bits set in the Standard Event Status Register which correspond to bits set in the Standard Event Status Enable Register will cause the ESB bit to be set in the Status Byte Register.

The Standard Event Status Register is read and cleared by the *ESR? command. The Standard Event Status Enable register is set by the *ESE <nrf> command and read by the *ESE? command.

It is a bit field where each bit has the following significance.

Bit 7: Power On. Set when power is first applied to the instrument.

Bit 6: User Request (Not used).

Bit 5: Command Error. Set when a syntax type error is detected in a command from the bus. The parser is reset and parsing continues at the next byte in the input stream

Bit 4: Execution Error. Set when an error is encountered while attempting to execute a completely parsed command. The appropriate error number will be reported in the Execution Error Register, see 'Error / Event Queue.' section

Bit 3: Not used.

Bit 2: Query Error. Set when a query occurs. The appropriate error number will be reported in the Query Error Register, see 'Error messages' section.

Bit 1: Not used.

Bit 0: Operation Complete: Set in response to the '*OPC' command.

Operation status register

This register contains a number representing the actions currently being performed by the instrument.

Each bit has the following meaning.

Bit 15: Not used.

Bit 14: Not used.

Bit 13: Not used.

Bit 12: Not used.

Bit 11: Not used.

Bit 10: Not used.

Bit 9: Not used.

Bit 8: Not used.

Bit 7: Not used.

Bit 6: Waiting for ARM- The instrument is in a “wait for arm” state of the trigger model.

Bit 5: Waiting for TRIG- The instrument is in a “wait for trigger” state of the trigger model.

Bit 4: Not used.

Bit 3: Sweeping – A sweep is in progress

Bit 2: Not used.

Bit 1: Not used.

Bit 0: Calibrating- The instrument is currently performing a calibration

Error / Event Queue

The error-/event-queue contains all errors and events that have occurred since the instrument was powered on. The queue can be read with the SYSTem:ERRor? command and begins with the first occurred error. When there are no further errors in the queue the response will be 0,"No Error"

Status byte register and service request enable register

These two registers are implemented as required by the IEEE STD. 488.2.
Any bits set in the Status Byte Register which correspond to bits set in the Service Request Enable Register will cause the RQS/MSS bit to be set in the Status Byte Register, thus generating a Service Request on the bus.

The Status Byte Register is read either by the *STB? command, which will return MSS in bit 6, or by a Serial Poll which will return RQS in bit 6. The Service Request Enable register is set by the *SRE <nrf> command and read by the *SRE? command.

Bit 7: STATus:OPERation summary bit. This bit is set if any bits in the STATus:OPERation register correspond to bits set in the STATus:OPERation:ENABle register.

Bit 6: RQS/MSS. This bit, as defined by IEEE Std. 488.2, contains both the Requesting Service message and the Master Status Summary message. RQS is returned in response to a Serial Poll and MSS is returned in response to the *STB? command.

Bit 5: ESB. The Event Status Bit. This bit is set if any bits set in the Standard Event Status Register correspond to bits set in the Standard Event Status Enable Register.

Bit 4: MAV. The Message Available Bit. This will be set when the instrument has a response message formatted and ready to send to the controller. The bit will be cleared after the Response Message Terminator has been sent.

Bit 3: Not used.

Bit 2: Error Queue is not empty. This will be set when there is one or more entries in the error queue.

Bit 1: Not used

Bit 0: Not used

Status model

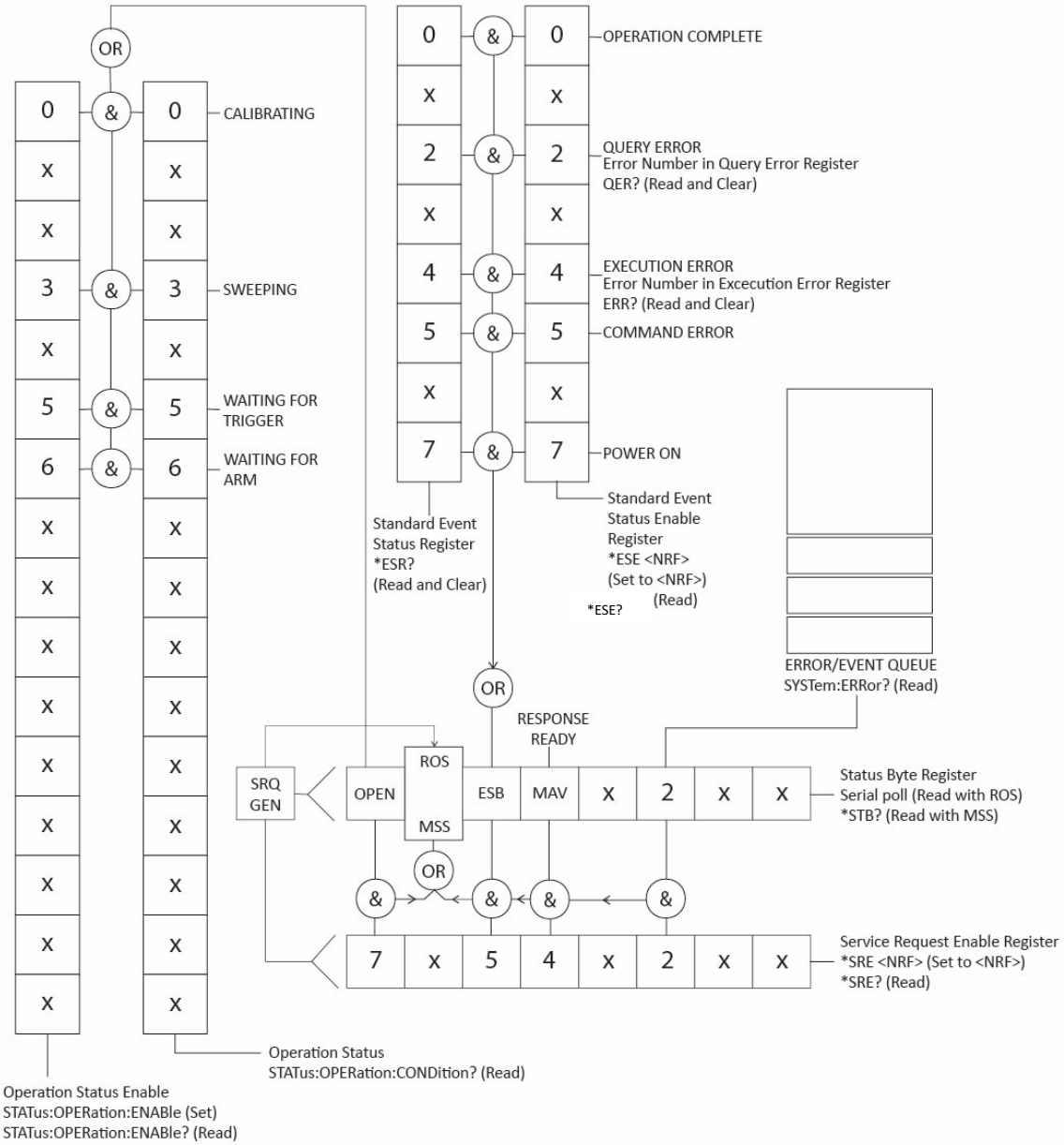

Power-on and remote operation default settings

The following instrument status values are set at power on:

Status Byte Register	= 0
Service Request Enable Register †	= 0
Standard Event Status Register	= 128 (pon bit set)
Standard Event Status Enable Register †	= 0
Operation Status Enable	= 0
Query Error Register	= 0
Parallel Poll Enable Register †	= 0

† Registers marked thus are specific to the GPIB section of the instrument and are of limited use via other interfaces.

The instrument will be in local state with the front panel controls active.

The instrument parameters at power-on are always the same as at last switch off with the exception of the output status. By default, the output is always off at power on but the user may change this from the front panel to be the same at power on as it was at switch off, see the Power On State paragraph in the instruction manual.

The *RST (reset) interface command resets the instrument to the Remote Operation Default settings.

8. REMOTE COMMAND FORMAT

USB and LAN

USB and LAN input to the instrument is buffered in a 1536 byte input queue which is filled, under interrupt in a manner transparent to all other instrument operations.

Commands must be sent as specified in the commands list and must be terminated with the command terminator code 0AH (Line Feed, LF). Commands may be sent in groups with individual commands separated from each other by the code 3BH (;). The group must be terminated with command terminator 0AH (Line Feed, LF).

Responses from the instrument to the controller are sent as specified in the commands list. Each response is terminated by a <RESPONSE MESSAGE TERMINATOR> which is 0DH (Carriage Return, CR) followed by 0AH (Line Feed, LF).

<WHITE SPACE> is defined as character codes 00H to 20H inclusive.

<WHITE SPACE> is ignored except in command identifiers. e.g. '*C LS' is not equivalent to '*CLS'. The high bit of all characters is ignored. The commands are case insensitive.

GPIB

GPIB input to the instrument is buffered in a 1536 byte input queue which is filled, under interrupt, in a manner transparent to all other instrument operations. The queue contains raw (un-parsed) data which is taken, by the parser, as required. Commands are executed in order and the parser will not start a new command until any previous command is complete. Responses are placed in the output queue until the instrument is addressed to talk when the response message will be sent.

Commands are sent as <PROGRAM MESSAGES> by the controller, each message consisting of zero or more <PROGRAM MESSAGE UNIT> elements separated by <PROGRAM MESSAGE UNIT SEPARATOR> elements.

A <PROGRAM MESSAGE UNIT> is any of the commands in the remote commands list.

A <PROGRAM MESSAGE UNIT SEPARATOR> is the semi-colon character ';' (3BH).

<PROGRAM MESSAGES> are separated by <PROGRAM MESSAGE TERMINATOR> elements which may be any of the following:

NL	The new line character (0AH)
NL^END	The new line character with the END message
^END	The END message with the last character of the message

Responses from the instrument to the controller are sent as <RESPONSE MESSAGES>. A <RESPONSE MESSAGE> consists of one <RESPONSE MESSAGE UNIT> followed by a <RESPONSE MESSAGE TERMINATOR>.

A <RESPONSE MESSAGE TERMINATOR> is the new line character with the END message NL^END.

Each query produces a specific <RESPONSE MESSAGE> which is listed along with the command in the remote commands list.

<WHITE SPACE> is ignored except in command identifiers. e.g. '*C LS' is not equivalent to '*CLS'. <WHITE SPACE> is defined as character codes 00H to 20H inclusive with the exception of the NL character (0AH). The high bit of all characters is ignored. The commands are case insensitive.

9. REMOTE CONTROL COMMANDS

SCPI Overview

This instrument uses SCPI (Standard Commands for Programmable Instruments) commands for remote control. The commands are based on SCPI Version 1999 and follow the syntax and rules including commands that are not taken from the SCPI standard. These commands are separated into two groups; common and subsystem.

Common commands are defined by the IEEE 488.2 standard to perform common instrument functions such as querying the status or resetting to default parameters.

Subsystem commands perform instrument specific functions and allow all operating parameters to be configured and queried. They are arranged in groups which correspond to particular functionality of the instrument. A tree structure is used extending to one or more levels below the root

Square brackets ([ ]) are used to represent a keyword that is optional for the command. Uppercase letters are used to differentiate between the short and long form version of keywords.

EXAMPLE

The command "`:[SOURce:]FM[:DEViation]`" is used to set the Frequency Modulation Deviation parameter and each of the following representations are equivalent and will set the FM Deviation to 123Hz.

```
:SOURce:FM:DEViation 123

:SOUR:FM:DEV 123

:SOUR:FM 123

:FM 123
```

Multiple SCPI commands can be combined into a single message using a semicolon as separator.

EXAMPLE

The combined message below will set the Frequency Modulation Deviation to 123Hz and enable FM as the modulation mode.

```
:SOURce:FM:DEViation 123;:SOURce:FM:STATe ON
```

The colon (:) character in the above example is used to reset the SCPI parser tree to the root level. If separated keywords are at the same branch of the SCPI tree then the colon may be omitted.

The message below is the equivalent of the one above.

```
:SOURce:FM:DEViation 123;STATe ON
```

A message terminator (typically a 'new line' character) completes the message and resets the current path to the root.

SCPI subsystems

SOURce	The SOURce subsystem contains the commands for configuring the RF output signal.
OUTPut	The OUTPut subsystem configures the RF output signal state.
UNIT	The UNIT subsystem is used to set the default unit for power parameters if no unit is specified in a command.
TRIGger	The TRIGger subsystem is used select the trigger sources for sweep mode.
MMEMory	The MMEMory subsystem is used to manage instrument setups, sweep lists and user defined PRBS patterns.
STATus	The STATus subsytem is used to query the Operation Condition Register.
SYSTem	The SYSTem subsystem is used for a number of functions not associated with the RF output signal such as configuring the LAN.

Parameter data formats

Parameter Formats

<NR1>	Digits with no fractional part, i.e. an integer Example: 451
<NR2>	Digits with an explicit decimal point. Example: 0.451
<NR3>	Digits with an explicit decimal point and an exponent. Example: 45.1e+01
<NRF>	A number in any format. Example: 12, 12·00, 1·2 e1 and 120 e-1 are all accepted as the number 12
<CPD>	<CHARACTER PROGRAM DATA>, i.e. a short mnemonic or string such as ON or OFF. Multiple CPDs in a command are shown as <CPD1>, <CPD2>, <CPD3>, etc.
<CRD>	<CHARACTER RESPONSE DATA>. Returns a short mnemonic or string. Only the short form of the parameter is returned.
<Bool>	Boolean data. Example: 0 | 1 or ON | OFF
<Quad>	A number in dotted quad notation.
<Unquoted String>	String data without any quotation.
< Block >	A sequence of comma separated <NRF> values.

10. SCPI COMMAND LIST

Common commands

- *IDN? Return the instrument identification. The exact response is determined by the instrument configuration and is of the form of <Manufacturer, Model,Serial No., XX.xx >
- *CLS Clear Status. Clears the Status structure. This indirectly clears the Status Byte Register.
- *RST Reset the instrument parameters to their default values.
- *WAI Wait for Operation Complete true. As all commands are completely executed before the next is started this command takes no additional action.
- *TST? This instrument has no self test capability and the response is always 0 <RMT>
- *SAV < NRF> Save the complete instrument set-up to a file on the internal storage. The file name will be of the format MODELNAME<nrf>.SET. Valid values are 1 to 9. For example “TGR20517.SET”
- *RCL < NRF > Recall a previously stored instrument set-up to a file from the internal storage. Valid values are 1 to 10. A value of 10 is a special case and will recall default parameters. It is equivalent to the *RST command.
- *TRG This command is the same as pressing the [Trigger] on the front panel.
- *SRE < NRF > Set the Service Request Enable Register to <NRF>.
- *SRE? Return the value of the Service Request Enable Register in <NR1> numeric format. The syntax of the response is<NR1><RMT>
- *ESE < NRF > Set the Standard Event Status Enable Register to the value of <NRF>
- *ESE? Return the value in the Standard Event Status Enable Register in <NR1> numeric format. The syntax of the response is <NR1><RMT>
- *PRE < NRF > Set the Parallel Poll Enable Register to the value <NRF>.
- *PRE? Return the value in the Parallel Poll Enable Register in <NR1> numeric format. The syntax of the response is <NR1><RMT>
- *OPC Set the Operation Complete bit (bit 0) in the Standard Event Status Register. This will happen immediately the command is executed because of the sequential nature of all operations.
- *OPC? Query Operation Complete status. The response is always 1<RMT> and will be available immediately the command is executed because all commands are sequential.

- *ESR? Return the value in the Standard Event Status Register in <NR1> numeric format. The register is then cleared. The response is <NR1><RMT>. See Status reporting section for details.
- QER? Query and clear Query Error Register. The response format is NR1<RMT>
- *STB? Return the value of the Status Byte Register in <NR1> numeric format. The syntax of the response is<NR1><RMT>
- *IST? Return ist local message as defined by IEEE Std. 488.2. The syntax of the response is 0<RMT>, if the local message is false, or 1<RMT>, if the local message is true.

Query commands

All commands (with the exception of any set in Orange) can be presented as a query command by adding '?' at the end, this will return the current set value or parameter as <…>

Commands set in Blue are query only.

SYSTem Subsystem commands

GPIB (Optional)

- :SYSTem:COMMunicate:GPIB:ADDRess <NRF> — Set the GPIB address to <NRF>

USB

- :SYSTem:COMMunicate:USB:VID? — Query the instrument USB Vendor ID. The response is "0x103E"
- :SYSTem:COMMunicate:USB:PID? — Query the instrument USB Product ID. The response is "0x04EC"

LAN

- :SYSTem:COMMunicate:LAN:MAC? — Query the media access control address (MAC) of the instrument. The response is a 12 digit hexadecimal number of 6 bytes separated with a hyphen.
- :SYSTem:COMMunicate:LAN:TCPPort? — Query the TCP port used for instrument control and monitoring. This instrument used the standard scpi-raw port 5025.
- :SYSTem:COMMunicate:LAN:IDENtify[:STATE] <Bool>
  Enable and disable the LAN Identify feature. Setting this to true will cause the connected instrument display to flash until reset to false. OFF|ON|0|1
- :SYSTem:COMMunicate:LAN:RESet — Return all LAN settings to the default values and restart the network connection.
- :SYSTem:COMMunicate:LAN:HOSTname:DESired<Unquoted String>
  Set the desired mDNS hostname
- :SYSTem:COMMunicate:LAN:HOSTname[:RESolved]?
  Query the unique resolved mDNS hostname
- :SYSTem:COMMunicate:LAN:MDNS:SNAMe:DESired <Unquoted String>
  Set the desired mDNS service name
- :SYSTem:COMMunicate:LAN:MDNS:SNAMe[:RESolved]?
  Query the resolved mDNS service name
- :SYSTem:COMMunicate:LAN:IPCONFig <CPD> — Set automatic or manual setting of the IP address AUTOmatic|MANual

- :SYSTem:COMMunicate:LAN:IPADdress:DESired <Quad>
  Set the desired IP address when MANual configuration is used

- :SYSTem:COMMunicate:LAN:SMASk:DESired <Quad>
  Set the desired subnet mask when MANual configuration is used.

- :SYSTem:COMMunicate:LAN:GATeway:DESired <Quad>
  Set the IP address of the default gateway when MANual configuration is used

- :SYSTem:COMMunicate:LAN:PRIDNS:DESired <Quad>
  Set the IP address of the primary DNS server on the network when MANual configuration is used

- :SYSTem:COMMunicate:LAN:SECDNS:DESired <Quad>
  Set the IP address of the secondary DNS server on the network.

- :SYSTem:COMMunicate:LAN:IPADdress[:RESolved]? <Quad>
  Query the resolved IP address in use on the network.

- :SYSTem:COMMunicate:LAN:SMASk[:RESolved]? <Quad>
  Query the subnet mask in use on the network.

- :SYSTem:COMMunicate:LAN:GATeway[:RESolved]? <Quad>
  Query the default gateway in use on the network.

- :SYSTem:COMMunicate:LAN:PRIDNS[:RESolved]? <Quad>
  Query the primary DNS server in use on the network.

- :SYSTem:COMMunicate:LAN:SECDNS[:RESolved]? <Quad>
  Query the secondary DNS server in use on the network.

- :SYSTem:COMMunicate:LAN:IPUPDate
  Apply any pending changes made by other commands in the SYSTem:COMMunicate:LAN subsystem and restart the network connection.

Beep

- :SYSTem:BEEPer <Bool>

  Set all system buzzer settings to <Bool> OFF|ON |0|1

- :SYSTem:BEEPer?

  Query the **system buzzer settings**. The response is a comma separated list of the states of the error, warning, info, key, touch and remote buzzers.

Backlight

- :SYSTem:BACKLight <NRF>

  Set the **LCD backlight brightness** to <NRF>%

Colour theme

- :SYSTem:THEMe <CPD>

  Set the **system display colour theme** to <CPD> THEMe1| THEMe2| THEMe3| THEMe4|THEMe5| THEMe6| THEMe7| THEMe8

Digit format

- :SYSTem:DIGIformat <CPD>

  Set the **displayed digit grouping of frequency values** to <CPD> SPACe|COMMa

Power on state

- :SYSTem:POWeron <CPD>

  Set the **instrument power on state** to <CPD> DEFualt|LATest

Error message

- :SYSTem:ERRor[:NEXT]? <CPD>

  Query the **error/event queue for the oldest entry and remove it from the queue**.
  The response is an error number followed by a description of the error. If the queue is empty the response will be `0, "No error"`

Firmware version

- :SYSTem:VERSion?

  Query the **instrument firmware version number**.

- :SYSTem:KLOCk<Bool >

  Enable and disable the remote control keyboard lock out. This disables the front panel LOCAL key when set to true. OFF|ON|0|1

Local mode

- :SYSTem:LOCal

  Go to local operation. Any subsequent command will restore the remote state.

STATus Subsystem commands

· :STATus:OPERation:CONDition?	Query the Status Operation Condition register. See Status reporting section for details. The content is not deleted after being read as it indicates the current operating status
· :STATus:OPERation:ENABle <NRF>	Set Status Operation Enable Register to the value of <NRF>

SOURce Subsystem Commands

Continuous wave

- :[SOURce:]FREQuency[:CW] <NRF> — **Set** the **frequency of the RF output signal** to <NRF> HZ|KHZ|MHZ|MAHZ|GHZ
- :[SOURce:]FREQuency[:FIXed] <NRF> — **Set** the **frequency of the RF output signal** to <NRF> HZ|KHZ|MHZ|MAHZ|GHZ
- :[SOURce:]POWer[:LEVel][:IMMediate][:AMPLitude] <NRF> — **Set** the **output level of the RF output signal** to <NRF> DBM|DBUV|UV|MV

Modulation

- :[SOURce:]MODulation[:STATe] <Bool> — **Set Modulation state** to <Bool> OFF|ON|0|1

AM

- : [SOURce:]AM[:DEPTh] <NRF> — **Set AM** waveform **depth** to <NRF> %
- :[SOURce:]AM:INTernal:FREQuency <NRF> — **Set AM** waveform **internal frequency** to <NRF> HZ|KHZ|MHZ|MAHZ|GHZ
- :[SOURce:]AM:SOURce <CPD> — **Set AM** waveform **source** to <CPD> SINe|SQUare|RAMPPositive|RAMPNegative|TRIangle|EXTernal
- :[SOURce:]AM:SYNCOUT <Bool> — **Set AM sync out** to <Bool> OFF|ON|0|1
- :[SOURce:]AM:MODOUT <Bool> — **Set AM mod out** to <Bool> OFF|ON|0|1
- :[SOURce:]AM:STATe <Bool> — **Set AM State** to <Bool> OFF|ON|0|1
- :[SOURce:]AM:MODE <CPD> — **Set AM mode** to <CPD> CONTinuous|TRIGgered
- :[SOURce:]AM:TRIGger:RATE <NRF> — **Set AM trigger rate** to <NRF> PS|NS|US|MS|S
- :[SOURce:]AM:TRIGger:COUNt <NRF> — **Set AM trigger count** to <NRF>
- :[SOURce:]AM:TRIGger:SOURce <CPD> — **Set AM trigger source** to <CPD> INTernal|EXTPositive|EXTNegative|MANual|BUS
- :[SOURce:]AM:TRIGger:TYPE <CPD> — **Set AM trigger type** to <CPD> FINite|INFinite

FM

- :[SOURce:]FM[:DEViation] <NRF> — **Set FM** waveform **deviation** to <NRF> HZ|KHZ|MHZ|MAHZ|GHZ
- :[SOURce:]FM:INTernal:FREQuency <NRF> — **Set FM** waveform **internal frequency** to <NRF> HZ|KHZ|MHZ|MAHZ|GHZ

:[SOURce:]FM:SOURce <CPD>	**Set FM** waveform **source** to <CPD> SINe|SQUare|RAMPPositive| RAMPNegative|TRIangle|EXTernal
:[SOURce:]FM:SYNCOUT <Bool>	**Set FM sync out** to <Bool> OFF|ON|0|1
:[SOURce:]FM:MODOUT <Bool>	**Set FM mod out** to <Bool> OFF|ON|0|1
:[SOURce:]FM:STATe <Bool>	**Set FM State** to <Bool> OFF|ON|0|1
:[SOURce:]FM:MODE <CPD>	**Set FM mode** to <CPD> CONTinuous|TRIGgered
:[SOURce:]FM:TRIGger:RATE <NRF>	**Set FM trigger rate** to <NRF> PS|NS|US|MS|S
:[SOURce:]FM:TRIGger:COUNt <NRF>	**Set FM trigger count** to <NRF>
:[SOURce:]FM:TRIGger:SOURce <CPD>	**Set FM trigger source** to <CPD> INTernal|EXTPositive|EXTNegative|MANual|BUS
:[SOURce:]FM:TRIGger:TYPE <CPD>	**Set FM trigger type** to <CPD> FINite|INFinite

PM

:[SOURce:]PM[:DEViation] <NRF>	**Set PM** waveform **deviation** to <NRF> RAD
:[SOURce:]PM:INTernal:FREQuency <NRF>	**Set PM** waveform **internal frequency** to <NRF> HZ|KHZ|MHZ|MAHZ|GHZ
:[SOURce:]PM:SOURce <CPD>	**Set PM** waveform **source** to <CPD> SINe|SQUare RAMPPositive| RAMPNegative|TRIangle EXTernal
:[SOURce:]PM:SYNCOUT <Bool>	**Set PM sync out** to <Bool> OFF|ON|0|1
:[SOURce:]PM:MODOUT <Bool>	**Set PM mod out** to <Bool> OFF|ON|0|1
:[SOURce:]PM:STATe <Bool>	**Set PM State** to <Bool> OFF|ON|0|1
:[SOURce:]PM:MODE <CPD>	**Set PM mode** to <CPD> CONTinuous|TRIGgered
:[SOURce:]PM:TRIGger:RATE <NRF>	**Set PM trigger rate** to <NRF> PS|NS|US|MS|S
:[SOURce:]PM:TRIGger:COUNt <NRF>	**Set PM trigger count** to <NRF>
:[SOURce:]PM:TRIGger:SOURce <CPD>	**Set PM trigger source** to <CPD> INTernal|EXTPositive|EXTNegative|MANual|BUS
:[SOURce:]PM:TRIGger:TYPE <CPD>	**Set PM trigger type** to <CPD> FINite|INFinite

ASK

:[SOURce:]ASK[:DEPTh] <NRF>	**Set ASK** waveform **depth** to <NRF> %
:[SOURce:]ASK:INTernal:BRATe <NRF>	**Set ASK** waveform **internal bitrate** to <NRF> BPS
:[SOURce:]ASK:SOURce <CPD>	**Set ASK** waveform **source** to <CPD> USER|PRBS7|PRBS9|PRBS11| PRBS15|SQUare|EXTernal
:[SOURce:]ASK:SYNCOUT <CPD>	**Set ASK sync out** to <CPD> OFF|STARt|BITrate|HALFBITrate
:[SOURce:]ASK:MODOUT <CPD>	**Set ASK mod out** to <CPD> OFF|ON
:[SOURce:]ASK:MODE <CPD>	**Set ASK mode** to <CPD> CONTinuous|TRIGgered
:[SOURce:]ASK:STATe <Bool>	**Set ASK State** to <Bool> OFF|ON|0|1
:[SOURce:]ASK:TRIGger:RATE <NRF>	**Set ASK trigger rate** to <NRF> PS|NS|US|MS|S
:[SOURce:]ASK:TRIGger:COUNt <NRF>	**Set ASK trigger count** to <NRF>
:[SOURce:]ASK:TRIGger:SOURce <CPD>	**Set ASK trigger source** to <CPD> INTernal|EXTPositive|EXTNegative|MANual|BUS
:[SOURce:]ASK:TRIGger:TYPE <CPD>	**Set ASK trigger type** to <CPD> FINite|INFinite
:[SOURce:]ASK:TRIGger:MODE <CPD>	**Set ASK trigger mode** to <CPD> BIT|BLOCk

OOK

:[SOURce:]OOK:INTernal:BRATe <NRF>	**Set OOK** waveform **internal bitrate** to <NRF> BPS
:[SOURce:]OOK:SOURce <CPD>	**Set OOK** waveform **source** to <CPD> USER|PRBS7|PRBS9|PRBS11| PRBS15|SQUare|EXTernal
:[SOURce:]OOK:SYNCOUT <CPD>	**Set OOK sync out** to <CPD> OFF|STARt|BITrate|HALFBITrate
:[SOURce:]OOK:MODOUT <CPD>	**Set OOK mod out** to <CPD> OFF|ON
:[SOURce:]OOK:MODE <CPD>	**Set OOK mode** to <CPD> CONTinuous|TRIGgered
:[SOURce:]OOK:STATe <Bool>	**Set OOK State** to <Bool> OFF|ON|0|1
:[SOURce:]OOK:TRIGger:RATE <NRF>	**Set OOK trigger rate** to <NRF> PS|NS|US|MS|S
:[SOURce:]OOK:TRIGger:COUNt <NRF>	**Set OOK trigger count** to <NRF>
:[SOURce:]OOK:TRIGger:TYPE <CPD>	**Set OOK trigger type** to <CPD> FINite|INFinite

· :[SOURce:]OOK:TRIGger:MODE <CPD>	**Set OOK trigger mode** to <CPD> BIT|BLOCk
· :[SOURce:]OOK:TRIGger:SOURce <CPD>	**Set OOK trigger source** to <CPD> INTernal|EXTPositive|EXTNegative|MANual|BUS

FSK

· :[SOURce:]FSK[:DEViation] <NRF>	**Set FSK** waveform **deviation** to <NRF> HZ|KHZ|MHZ|MAHZ|GHZ
· :[SOURce:]FSK:INTernal:BRATe <NRF>	**Set FSK** waveform **internal bitrate** to <NRF> BPS
· :[SOURce:]FSK:SOURce <CPD>	**Set FSK** waveform **source** to <CPD> USER PRBS7|PRBS9|PRBS11| PRBS15|SQUare|EXTernal
· :[SOURce:]FSK:SYNCOUT <CPD>	**Set FSK sync out** to <CPD> OFF|STARt|BITrate|HALFBITrate
· :[SOURce:]FSK:MODOUT <CPD>	**Set FSK mod out** to <CPD> OFF|BINary|FILTered
· :[SOURce:]FSK:MODE <CPD>	**Set FSK mode** to <CPD> CONTinuous|TRIGgered
· :[SOURce:]FSK:STATe <Bool>	**Set FSK State** to <Bool> OFF|ON|0|1
· :[SOURce:]FSK:FILTer <CPD>	**Set FSK filte**r to <CPD> GAUSSIANBT03|GAUSSIANBT05| GAUSSIANBT07|RAISEDCOS05|RAISEDCOS07| ROOTRAISEDCOS05|ROOTRAISEDCOS07|NONe| HALFSINe
· :[SOURce:]FSK:TRIGger:RATE <NRF>	**Set FSK trigger rate** to <NRF> PS|NS|US|MS|S
· :[SOURce:]FSK:TRIGger:COUNt <NRF>	**Set FSK trigger count** to <NRF>
· :[SOURce:]FSK:TRIGger:TYPE <CPD>	**Set FSK trigger type** to <CPD> FINite|INFinite
· :[SOURce:]FSK:TRIGger:MODE <CPD>	**Set FSK trigger mode** to <CPD> BIT|BLOCk
· :[SOURce:]FSK:TRIGger:SOURce <CPD>	**Set FSK trigger source** to <CPD> INTernal|EXTPositive|EXTNegative|MANual|BUS

3FSK

· :[SOURce:]3FSK[:DEViation] <NRF>	**Set 3FSK** waveform **deviation** to <NRF> HZ|KHZ|MHZ|MAHZ|GHZ
· :[SOURce:]3FSK:INTernal:BRATe <NRF>	**Set 3FSK** waveform **internal bitrate** to <NRF> BPS
· :[SOURce:]3FSK:SOURce <CPD>	**Set 3FSK** waveform **source** to <CPD> USER|PRBS7|PRBS9|PRBS11| PRBS15|SQUare|EXTernal

· :[SOURce:]3FSK:SYNCOUT <CPD>	**Set 3FSK sync out** to <CPD> OFF|STARt|BITrate|HALFBITrate
· :[SOURce:]3FSK:MODOUT <CPD>	**Set 3FSK mod out** to <CPD> OFF|BINary|FILTered|ENCoded
· :[SOURce:]3FSK:MODE <CPD>	**Set 3FSK mode** to <CPD> CONTinuous|TRIGgered
· :[SOURce:]3FSK:STATe <Bool>	**Set 3FSK State** to <Bool> OFF|ON|0|1
· :[SOURce:]3FSK:FILTer <CPD>	**Set 3FSK filter** to <CPD> GAUSSIANBT03|GAUSSIANBT05| GAUSSIANBT07|RAISEDCOS05|RAISEDCOS07| ROOTRAISEDCOS05|ROOTRAISEDCOS07|NONe| HALFSINe
· :[SOURce:]3FSK:ENCoding:SYNC <CPD>	**Set 3FSK encoding sync** to <CPD> EXTPositive|EXTNegative|NONe
· :[SOURce:]3FSK:TRIGger:RATE <NRF>	**Set 3FSK trigger rate** to <NRF> PS|NS|US|MS|S
· :[SOURce:]3FSK:TRIGger:COUNt <NRF>	**Set 3FSK trigger count** to <NRF>
· :[SOURce:]3FSK:TRIGger:TYPE <CPD>	**Set 3FSK trigger type** to <CPD> FINite|INFinite
· :[SOURce:]3FSK:TRIGger:MODE <CPD>	**Set 3FSK trigger mode** to <CPD> BIT|BLOCk
· :[SOURce:]3FSK:TRIGger:SOURce <CPD>	**Set 3FSK trigger source** to <CPD> INTernal|EXTPositive|EXTNegative|MANual|BUS

4FSK

· :[SOURce:]4FSK[:DEViation] <NRF>	**Set 4FSK** waveform **deviation** to <NRF> HZ|KHZ|MHZ|MAHZ|GHZ
· :[SOURce:]4FSK:INTernal:BRATe <NRF>	**Set 4FSK** waveform **internal bitrate** to <NRF> BPS
· :[SOURce:]4FSK:SOURce <CPD>	**Set 4FSK** waveform **source** to <CPD> USER| PRBS7| PRBS9| PRBS11| PRBS15|SQUare|EXTernal
· :[SOURce:]4FSK:SYNCOUT <CPD>	**Set 4FSK sync out** to <CPD> OFF|STARt|BITrate|HALFBITrate
· :[SOURce:]4FSK:MODOUT <CPD>	**Set 4FSK mod out** to <CPD> OFF|BINary|FILTered|ENCoded
· :[SOURce:]4FSK:MODE <CPD>	**Set 4FSK mode** to <CPD> CONTinuous|TRIGgered
· :[SOURce:]4FSK:STATe <Bool>	**Set 4FSK State** to <Bool> OFF|ON|0|1

· :[SOURce:]4FSK:FILTer <CPD>	**Set 4FSK filter** to <CPD> GAUSSIANBT03|GAUSSIANBT05| GAUSSIANBT07|RAISEDCOS05|RAISEDCOS07| ROOTRAISEDCOS05|ROOTRAISEDCOS07|NONe| HALFSINe
· :[SOURce:]4FSK:ENCoding:SYNC <CPD>	**Set 4FSK encoding sync** to <CPD> EXTPositive|EXTNegative|NONe
· :[SOURce:]4FSK:ENCoding:METHod <CPD>	**Set 4FSK encoding method** to <CPD> GRAY|BINary
· :[SOURce:]4FSK:TRIGger:RATE <NRF>	**Set 4FSK trigger rate** to <NRF> PS|NS|US|MS|S
· :[SOURce:]4FSK:TRIGger:COUNt <NRF>	**Set 4FSK trigger count** to <NRF>
· :[SOURce:]4FSK:TRIGger:TYPE <CPD>	**Set 4FSK trigger type** to <CPD> FINite|INFinite
· :[SOURce:]4FSK:TRIGger:MODE <CPD>	**Set 4FSK trigger mode** to <CPD> BIT|BLOCk
· :[SOURce:]4FSK:TRIGger:SOURce <CPD>	**Set 4FSK trigger source** to <CPD> INTernal|EXTPositive|EXTNegative|MANual|BUS

GFSK

· :[SOURce:]GFSK[:DEViation] <NRF>	**Set GFSK** waveform **deviation** to <NRF> HZ|KHZ|MHZ|MAHZ|GHZ
· :[SOURce:]GFSK:INTernal:BRATe <NRF>	**Set GFSK** waveform **internal bitrate** to <NRF> BPS
· :[SOURce:]GFSK:SOURce <CPD>	**Set GFSK** waveform **source** to <CPD> USER|PRBS7|PRBS9|PRBS11| PRBS15|SQUare|EXTernal
· :[SOURce:]GFSK:SYNCOUT <CPD>	**Set GFSK sync out** to <CPD> OFF|STARt|BITrate|HALFBITrate
· :[SOURce:]GFSK:MODOUT <CPD>	**Set GFSK mod out** to <CPD> OFF|BINary|FILTered
· :[SOURce:]GFSK:MODE <CPD>	**Set GFSK mode** to <CPD> CONTinuous|TRIGgered
· :[SOURce:]GFSK:STATe <Bool>	**Set GFSK State** to <Bool> OFF|ON|0|1
· :[SOURce:]GFSK:FILTer <CPD>	**Set GFSK filter** to <CPD> GAUSSIANBT03|GAUSSIANBT05|GAUSSIANBT07
· :[SOURce:]GFSK:TRIGger:RATE <NRF>	**Set GFSK trigger rate** to <NRF> PS|NS|US|MS|S
· :[SOURce:]GFSK:TRIGger:COUNt <NRF>	**Set GFSK trigger count** to <NRF>
· :[SOURce:]GFSK:TRIGger:TYPE <CPD>	**Set GFSK trigger type** to <CPD> FINite|INFinite
· :[SOURce:]GFSK:TRIGger:MODE <CPD>	**Set GFSK trigger mode** to <CPD> BIT|BLOCk

· :[SOURce:]GFSK:TRIGger:SOURce <CPD>	**Set GFSK trigger source** to <CPD> INTernal|EXTPositive|EXTNegative|MANual|BUS

MSK

· :[SOURce:]MSK:INTernal:BRATe <NRF>	**Set MSK** waveform **internal bitrate** to <NRF> BPS
· :[SOURce:]MSK:SOURce <CPD>	**Set MSK** waveform **source** to <CPD> USER|PRBS7|PRBS9|PRBS11|PRBS15|SQUare
· :[SOURce:]MSK:SYNCOUT <CPD>	**Set MSK sync out** to <CPD> OFF|STARt|BITrate|HALFBITrate
· :[SOURce:]MSK:MODOUT <CPD>	**Set MSK mod out** to <CPD> OFF|ON
· :[SOURce:]MSK:MODE <CPD>	**Set MSK mode** to <CPD> CONTinuous|TRIGgered
· :[SOURce:]MSK:STATe <Bool>	**Set MSK State** to <Bool> OFF|ON|0|1
· :[SOURce:]MSK:TRIGger:RATE <NRF>	**Set MSK trigger rate** to <NRF> PS|NS|US|MS|S
· :[SOURce:]MSK:TRIGger:COUNt <NRF>	**Set MSK trigger count** to <NRF>
· :[SOURce:]MSK:TRIGger:TYPE <CPD>	**Set MSK trigger type** to <CPD> FINite|INFinite
· :[SOURce:]MSK:TRIGger:MODE <CPD>	**Set MSK trigger mode** to <CPD> BIT|BLOCk
· :[SOURce:]MSK:TRIGger:SOURce <CPD>	**Set MSK trigger source** to <CPD> INTernal|EXTPositive|EXTNegative|MANual|BUS

GMSK

· :[SOURce:]GMSK:INTernal:BRATe <NRF>	**Set GMSK** waveform **internal bitrate** <NRF> BPS
· :[SOURce:]GMSK:SOURce <CPD>	**Set GMSK** waveform **source** to <CPD> USER|PRBS7|PRBS9|PRBS11|PRBS15|SQUare
· :[SOURce:]GMSK:SYNCOUT <CPD>	**Set GMSK sync out** to <CPD> OFF|STARt|BITrate|HALFBITrate
· :[SOURce:]GMSK:MODOUT <CPD>	**Set GMSK mod out** to <CPD> OFF|BINary|FILTered
· :[SOURce:]GMSK:MODE <CPD>	**Set GMSK mode** to <CPD> CONTinuous|TRIGgered
· :[SOURce:]GMSK:STATe <Bool>	**Set GMSK State** to <Bool> OFF|ON|0|1
· :[SOURce:]GMSK:FILTer <CPD>	**Set GMSK filter** to <CPD> GAUSSIANBT03|GAUSSIANBT05|GAUSSIANBT07
· :[SOURce:]GMSK:TRIGger:RATE <NRF>	**Set GMSK trigger rate** to <NRF> PS|NS|US|MS|S

· :[SOURce:]GMSK:TRIGger:COUNt <NRF>	**Set GMSK trigger count** to <NRF>
· :[SOURce:]GMSK:TRIGger:TYPE <CPD>	**Set GMSK trigger type** to <CPD> FINite|INFinite
· :[SOURce:]GMSK:TRIGger:MODE <CPD>	**Set GMSK trigger mode** to <CPD> BIT|BLOCk
· :[SOURce:]GMSK:TRIGger:SOURce <CPD>	**Set GMSK trigger source** to <CPD> INTernal|EXTPositive|EXTNegative|MANual|BUS

HMSK

· :[SOURce:]HMSK:INTernal:BRATe <NRF>	**Set HMSK** waveform **internal bitrate** <NRF> BPS
· :[SOURce:]HMSK:SOURce <CPD>	**Set HMSK** waveform **source** to <CPD> USER|PRBS7|PRBS9|PRBS11|PRBS15|SQUare
· :[SOURce:]HMSK:SYNCOUT <CPD>	**Set HMSK sync out** to <CPD> OFF|STARt|BITrate|HALFBITrate
· :[SOURce:]HMSK:MODOUT <CPD>	**Set HMSK mod out** to <CPD> OFF|BINary|FILTered
· :[SOURce:]HMSK:MODE <CPD>	**Set HMSK mode** to <CPD> CONTinuous|TRIGgered
· :[SOURce:]HMSK:STATe <Bool>	**Set HMSK State** to <Bool> OFF|ON|0|1
· :[SOURce:]HMSK:FILTer <CPD>	**Set HMSK filter** to <CPD> HALFSINe
· :[SOURce:]HMSK:TRIGger:RATE <NRF>	**Set HMSK trigger rate** to <NRF> PS|NS|US|MS|S
· :[SOURce:]HMSK:TRIGger:COUNt <NRF>	**Set HMSK trigger count** to <NRF>
· :[SOURce:]HMSK:TRIGger:TYPE <CPD>	**Set HMSK trigger type** to <CPD> FINite|INFinite
· :[SOURce:]HMSK:TRIGger:MODE <CPD>	**Set HMSK trigger mode** to <CPD> BIT|BLOCk
· :[SOURce:]HMSK:TRIGger:SOURce <CPD>	**Set HMSK trigger source** to <CPD> INTernal|EXTPositive|EXTNegative|MANual|BUS

PSK

· :[SOURce:]PSK[:DEViation] <NRF>	**Set PSK** waveform **deviation** to <NRF> RAD
· :[SOURce:]PSK:INTernal:BRATe <NRF>	**Set PSK** waveform **internal bitrate** <NRF> BPS
· :[SOURce:]PSK:SOURce <CPD>	**Set PSK** waveform **source** to <CPD> USER|PRBS7|PRBS9|PRBS11| PRBS15|SQUare|EXTernal
· :[SOURce:]PSK:SYNCOUT <CPD>	**Set PSK sync out** to <CPD> OFF|STARt|BITrate|HALFBITrate
· :[SOURce:]PSK:MODOUT <CPD>	**Set PSK mod out** to <CPD> OFF|ON

· :[SOURce:]PSK:MODE <CPD>	**Set PSK mode** to <CPD> CONTinuous|TRIGgered
· :[SOURce:]PSK:STATe <Bool>	**Set PSK State** to <Bool> OFF|ON|0|1
· :[SOURce:]PSK:TRIGger:RATE <NRF>	**Set PSK trigger rate** to <NRF> PS|NS|US|MS|S
· :[SOURce:]PSK:TRIGger:COUNt <NRF>	**Set PSK trigger count** to <NRF>
· :[SOURce:]PSK:TRIGger:SOURce <CPD>	**Set PSK trigger source** to <CPD> INTernal|EXTPositive|EXTNegative|MANual|BUS
· :[SOURce:]PSK:TRIGger:TYPE <CPD>	**Set PSK trigger type** to <CPD> FINite|INFinite
· :[SOURce:]PSK:TRIGger:MODE <CPD>	**Set PSK trigger mode** to <CPD> BIT|BLOCk

CW

· :[SOURce:]LIST:PRBS <NRF>,<Block1>	**Create** a **user specified PRBS list** of <NRF> points, followed by < Block1 > of comma separated high, low values. For example, to create a 10 point PRBS list with alternating high/low values use: :[SOURce:]LIST:PRBS 10,1,0,1,0,1,0,1,0,1,0

Mode

· :[SOURce:]FREQuency:MODE <CPD>	**Set** the **operating mode for generating the RF output signal** to <CPD>
· CW|FIXed|SWEep|LIST	

Sweep

· :[SOURce:]SWEep:TYPE <CPD>	**Set sweep type** to <CPD> STEP|LIST

General

· :[SOURce:]SWEep:CONtrol <CPD>	**Set sweep control** to < CPD > FREQuency|POWer|BOTH
· :[SOURce:]SWEep:MODE <CPD>	**Set sweep mode** to< CPD > CONTinous|SINGle
· :[SOURce:]SWEep:DIRection <CPD>	**Set sweep direction** to < CPD > UP|DOWN
· :[SOURce:]SWEep:SYNCOUT <CPD>	**Set sweep sync output** to OFF|ON
· :[SOURce:]SWEep:SYNCOUT:POLarity <CPD>	**Set sweep sync output polarity** to < CPD > POSitive|NEGative

Step

· :[SOURce:]FREQuency:STARt <NRF>	**Set step sweep start frequency** to < NRF > HZ|KHZ|MHZ|MAHZ|GHZ

· :[SOURce:]FREQuency:STOP <NRF>	**Set step sweep stop frequency** to < NRF > HZ|KHZ|MHZ|MAHZ|GHZ
· :[SOURce:]POWer:STARt <NRF>	**Set step sweep start amplitude** to < NRF > DBM|DBUV|UV|MV
· :[SOURce:]POWer:STOP <NRF>	**Set step sweep stop amplitude** to < NRF > DBM|DBUV|UV|MV
· :[SOURce:]SWEep:DWELl <NRF>	**Set step sweep dwell time** to < NRF > PS|NS|US|MS|S
· :[SOURce:]SWEep:POINTs <NRF>	**Set step sweep length** to < NRF >
· :[SOURce:]SWEep:SPACing <CPD>	**Set step sweep shape** to < CPD > LINear|LOGarithmic

List

· :[SOURce:]LIST:FREQuency <NRF>,<Block1>	**Create** a **user specified frequency, level and dwell step list** of <NRF> points, followed by < Block1 > of comma separated frequency, level and dwell values for each point. For example, to create a 2 point list with Frequency1 = 1MHz, Level1 = -10dBm, Dwell1 = 1s Frequency2 = 2MHz, Level2 = -20dBm, Dwell2 = 2s Use: :[SOURce:]LIST:FREQuency 2 , 1e6, -10, 1, 2e6, -20, 2

Reference clock

· :SOURce:ROSCillator:SOURce <CPD>	**Set reference clock source** to < CPD > INTernal|EXTernal

Low spur mode

· :[SOURce:]LOWSpur[:STATe] <Bool>	**Set low spur mode state** to <Bool> OFF|ON|0|1

UNIT Subsystem commands

- :UNIT:POWer <CPD>

Set the default unit for power parameters to <CPD> DBM|DBUV|UV|MV

OUTPut Subsystem commands

- :OUTPut[:STATe] <Bool> — Set the RF output state to <Bool> OFF|ON|0|1
- :OUTPut:ROSCillator[:STATe] <Bool> — Set reference clock output state to <Bool> OFF|ON|0|1

TRIGger Subsystem commands

· :TRIGger:SOURce <CPD>	**Set sweep trigger source** to <CPD> IMMediate|EXTPositive|EXTNegative| MANual|BUS|TIMer
· :TRIGger:SWEep:TIMer <NRF>	**Set sweep trigger timer** to <CPD> PS|NS|US|MS|S
· :TRIGger:POINT:SOURce <CPD>	**Set sweep trigger point source** to <CPD> IMMediate|EXTPositive|EXTNegative| MANual|BUS

MMEMory Subsystem commands

Stores

- :[MMEMory:]COPY:SETUP

  <Unquoted String1>, <Unquoted String2>
  Copy an **instrument setup** from a source of <Unquoted String1> to a destination <Unquoted String2>
  The keyword LIVE represents the current operating parameters of the instrument and may be a source or destination.
  For example, to copy the current operating parameters to a setup called “mysetup” on the internal storage use:
  :[MMEMory:]COPY:SETUP LIVE , mysetup
  Setup file names have a maximum length of 8 characters.

- :[MMEMory:]COPY:LIST:SWEep

  <Unquoted String1> , <Unquoted String2>
  Copy an **instrument sweep list** from a source of <Unquoted String1> to a destination <Unquoted String2>
  The keyword LIVE represents the currently active sweep list of the instrument and may be a source or destination.
  For example, to copy the currently active sweep list to a list called “mylist” on the internal storage use:
  :[MMEMory:]COPY:LIST:SWEep LIVE, mylist
  List file names have a maximum length of 8 characters.

- :[MMEMory:]COPY:LIST:PATtern

  <Unquoted String1> , <Unquoted String2>
  Copy a **user defined PRBS pattern** from a source of <Unquoted String1> to a destination <Unquoted String2>
  The keyword LIVE represents the currently applied sweep list of the instrument and may be a source or destination.
  For example, to copy the currently active user defined pattern to a pattern called “myPRBS” on the internal storage use:
  :[MMEMory:]COPY:LIST:PATtern LIVE, myPRBS
  Pattern names have a maximum length of 8 characters.

11. LEGACY COMMANDS

Aim-TTi Legacy commands

For Aim-TTi legacy product commands see the instruction manual for the legacy instrument, this can be found at: www.aimtti.com/support.

To set the instrument to legacy command mode, select UTILITY.

The remote command parameter window is on the second page, touch Page > followed by the Remote Command parameter window.

The options are TGR1040, TGR2050 or TGR2053/TGR2051- depending on the model of the instrument.

Select the required remote command set and touch OK.

12. FACTORY DEFAULT SETTINGS

Frequency	3 GHz / 1.5 GHz (for TGR2051)
Frequency Step	1 MHz
Amplitude	-10 dBm
Amplitude Step	10 dB
Low Spur Mode	Off
Reference Clock	Internal
Reference Clock Out	Off
MODULATION	
Modulation	OFF
Modulation Type	AM
AM Depth	30%
AM Modulating Source	Sine
AM Modulating Internal Frequency	1 kHz
AM Sync Out	OFF
AM Mod. Out	OFF
AM Mode	Immediate
AM Trigger Source	Internal
AM Trigger Type	Finite
AM Trigger Count	100
AM Trigger Rate	100ms
FM Deviation	20 kHz
FM Modulating Source	Sine
FM Modulating Internal Frequency	2 kHz
FM Sync Out	OFF
FM Mod. Out	OFF
FM Mode	Immediate
FM Trigger Source	Internal
FM Trigger Type	Finite
FM Trigger Count	100
FM Trigger Rate	100ms
PM Deviation	25.00 rad.
PM Modulating Source	Sine
PM Modulating Internal Frequency	3 kHz

PM Sync Out	OFF
PM Mod. Out	OFF
PM Mode	Immediate
PM Trigger Source	Internal
PM Trigger Type	Finite
PM Trigger Count	100
PM Trigger Rate	100ms
DIGITAL MODULATION (optional)	
ASK Depth	100%
ASK Modulating Source	PRBS7
ASK Modulating Internal Frequency	1 kbps
ASK Sync Out	OFF
ASK Mod. Out	OFF
ASK Mode	Immediate
ASK Trigger Source	Internal
ASK Trigger Type	Finite
ASK Trigger Mode	Bit
ASK Trigger Count	100
ASK Trigger Rate	100ms
OOK Depth	N/A
OOK Modulating Source	PRBS7
OOK Modulating Internal Frequency	1.5 kbps
OOK Sync Out	OFF
OOK Mod. Out	OFF
OOK Mode	Immediate
OOK Trigger Source	Internal
OOK Trigger Type	Finite
OOK Trigger Mode	Bit
OOK Trigger Count	150
OOK Trigger Rate	150ms
FSK Deviation	20 kHz
FSK Modulating Source	PRBS7
FSK Modulating Internal Frequency	2 kbps
FSK Sync Out	OFF
FSK Mod. Out	OFF

FSK Mode	Immediate
FSK Filter Type	None
FSK Encoding Sync	N/A
FSK Encoding Method	N/A
FSK Trigger Source	Internal
FSK Trigger Type	Finite
FSK Trigger Mode	Bit
FSK Trigger Count	200
FSK Trigger Rate	200ms
3FSK Deviation	30 kHz
3FSK Modulating Source	PRBS7
3FSK Modulating Internal Frequency	3 kbps
3FSK Sync Out	OFF
3FSK Mod. Out	OFF
3FSK Mode	Immediate
3FSK Filter Type	None
3FSK Encoding Sync	N/A
3FSK Encoding Method	N/A
3FSK Trigger Source	Internal
3FSK Trigger Type	Finite
3FSK Trigger Mode	Bit
3FSK Trigger Count	300
3FSK Trigger Rate	300ms
4FSK Deviation	40 kHz
4FSK Modulating Source	PRBS7
4FSK Modulating Internal Frequency	4 kbps
4FSK Sync Out	OFF
4FSK Mod. Out	OFF
4FSK Mode	Immediate
4FSK Filter Type	None
4FSK Encoding Sync	N/A
4FSK Encoding Method	Gray-code
4FSK Trigger Source	Internal
4FSK Trigger Type	Finite
4FSK Trigger Mode	Bit

4FSK Trigger Count	400
4FSK Trigger Rate	400ms
GFSK Deviation	50 kHz
GFSK Modulating Source	PRBS7
GFSK Modulating Internal Frequency	5 kbps
GFSK Sync Out	OFF
GFSK Mod. Out	OFF
GFSK Mode	Immediate
GFSK Filter Type	Gauss BT 0.3
GFSK Encoding Sync	N/A
GFSK Encoding Method	N/A
GFSK Trigger Source	Internal
GFSK Trigger Type	Finite
GFSK Trigger Mode	Bit
GFSK Trigger Count	500
GFSK Trigger Rate	500ms
MSK Deviation	N/A
MSK Modulating Source	PRBS7
MSK Modulating Internal Frequency	6 kbps
MSK Sync Out	OFF
MSK Mod. Out	OFF
MSK Mode	Immediate
MSK Filter Type	N/A
MSK Encoding Sync	N/A
MSK Encoding Method	N/A
MSK Trigger Source	Internal
MSK Trigger Type	Finite
MSK Trigger Mode	Bit
MSK Trigger Count	600
MSK Trigger Rate	600ms
GMSK Deviation	N/A
GMSK Modulating Source	PRBS7
GMSK Modulating Internal Frequency	7 kbps
GMSK Sync Out	OFF
GMSK Mod. Out	OFF

GMSK Mode	Immediate
GMSK Filter Type	Gauss BT 0.3
GMSK Encoding Sync	N/A
GMSK Encoding Method	N/A
GMSK Trigger Source	Internal
GMSK Trigger Type	Finite
GMSK Trigger Mode	Bit
GMSK Trigger Count	700
GMSK Trigger Rate	700ms
HMSK Deviation	N/A
HMSK Modulating Source	PRBS7
HMSK Modulating Internal Frequency	8 kbps
HMSK Sync Out	OFF
HMSK Mod. Out	OFF
HMSK Mode	Immediate
HMSK Filter Type	Half Sine
HMSK Encoding Sync	N/A
HMSK Encoding Method	N/A
HMSK Trigger Source	Internal
HMSK Trigger Type	Finite
HMSK Trigger Mode	Bit
HMSK Trigger Count	800
HMSK Trigger Rate	800ms
PSK Deviation	25.00 rad.
PSK Modulating Source	PRBS7
PSK Modulating Internal Frequency	9 kbps
PSK Sync Out	OFF
PSK Mod. Out	OFF
PSK Mode	Immediate
PSK Trigger Source	Internal
PSK Trigger Type	Finite
PSK Trigger Mode	Bit
PSK Trigger Count	900
PSK Trigger Rate	900ms

Modulation-User Pattern	Used for: ASK, OOK, FSK, 3FSK, 4FSK, GFSK, MSK, GMSK, HMSK, PSK
Modulation-User Pattern Length	2
Modulation- User Pattern settings	

Point #	Value
1	HIGH
2	LOW

SWEEP

Sweep Type	OFF
Sweep Type	Step
Sweep Control	Freq. + Ampl.
Sweep Direction	Up
Sweep Mode	Continuous
Sweep Sync Out	OFF
Sweep Sync Polarity	+ve Edge
Point Trigger	Immediate
Sweep Trigger	Immediate
Sweep Trigger Timer	500 ms
Step-Sweep Length	10
Step-Sweep Shape	Linear
Step-Sweep Dwell time	500 ms
Step-Sweep Start Frequency	150 MHz
Step-Sweep Stop Frequency	170 MHz
Step-Sweep Start Amplitude	-10 dBm
Step-Sweep Stop Amplitude	-40 dBm
List Sweep Length	2
List Sweep settings	

Frequency	Amplitude	Dwell Time
150.000000 MHz	-10.0 dBm	0.500 s
170.000000 MHz	-40.0 dBm	0.500 s

UTILITY

Brightness	40%
Power-on State	Latest
Colour Theme	Theme1
Encoder State	2 State
Buzzer	Error Tone-ON

	Warning Tone-ON	
	Info. Tone-ON	
	Key Tone-ON	
	Touch Tone-ON	
	Remote Tone-ON	
	Trigger Tone-ON	
LAN\IP Config. Method	Automatic	
LAN\IPv4 Manual	IP Address	192.168.1.100
	Subnet Mast	255.255.255.0
	Gateway	0.0.0.0
	Pri. DNS Server	0.0.0.0
	Sec. DNS Server	0.0.0.0
GPIB Address	11	

EXCELLENCE THROUGH EXPERIENCE

Aim-TTi is the trading name of Thurlby Thandar Instruments Ltd. (TTi), one of Europe's leading manufacturers of test and measurement instruments.

The company has wide experience in the design and manufacture of advanced test instruments and power supplies built up over more than thirty years.

The company is based in the United Kingdom, and all products are built at the main facility in Huntingdon, close to the famous university city of Cambridge.

TRACEABLE QUALITY SYSTEMS

TTi is an ISO9001 registered company operating fully traceable quality systems for all processes from design through to final calibration.

ISO9001:2015

Certificate number FM 20695

WHERE TO BUY AIM-TTI PRODUCTS

Aim-TTi products are widely available from a network of distributors and agents in more than sixty countries across the world.

To find your local distributor, please visit our website which provides full contact details.

Designed and built in Europe by:

Thurlby Thandar Instruments Ltd.
Glebe Road, Huntingdon, Cambridgeshire.
PE29 7DR United Kingdom
Tel: +44 (0)1480 412451 Fax: +44 (0)1480 450409
Email: sales@aimtti.com Web: www.aimtti.com

Book Part No. 48591-1460 Issue 2