INSTRUCTION MANUAL

EN

QL Series II

Bench/System Precision Linear Regulated DC Power Supply

Table of Contents

Introduction 3
Specification 5
Safety 8
Installation 9
Connections 10
Front Panel Connections 10
Rear Panel Connections 10
Initial Operation 12
Manual Operation 15
Main Outputs 15
Main Outputs – Link Mode (T models only) 22
Main Outputs – Copy Function (T models only) 24
Auxiliary Output (T models only) 24
Remote Operation (P models only) 25
Interface Locking 25
Address & Baud Rate Selection and Interface Status View 25
Remote/Local Operation 26
RS232 Interface 26
USB Interface 27
LAN Interface 27
Status Reporting 31
Remote Commands 35
RS232/USB Remote Command Format 35
GPIB Remote Command Formats (G models only) 35
Command List 36
Maintenance 41

Unmatched Precision, Unrivalled Performance

The QL series II provides the highest performance levels available in a laboratory power supply.

Voltage and current are controlled using 16 bit DACs enabling voltages to be set to 1mV resolution even at full output. Indeed, the accuracy is sufficient for the PSU to be used as a calibration source for some hand-held DMMs.

The QL series II uses pure linear technology and offers unrivalled performance in terms of regulation, output noise and dynamics. Line and load regulation are close to the limit of measurement. Output noise is less than 350µV rms in CV mode and down to 20µA rms in CI mode. Recovery time from transient current pulses is better than 50µs.

It provides full remote sense capability via dedicated sense terminals. Remote sense is essential to maintain precise regulation at the load. When remote sense is not required, internal local sensing can be selected at the touch of a button.

Multiple Ranges for Greater Flexibility

The QL series II provides multiple ranges for increased current capability at lower voltages. The main range offers 0 to 35 Volts at up to 3 Amps (QL355) or 0 to 56 Volts at up to 2 Amps (QL564). The higher current range provides up to 5 Amps for voltages up to 15V (QL355) or 4 Amps for voltages up to 25V (QL564). A further low current range provides enhanced current setting and measurement resolution of 0·1mA.

The product of voltage and current can be displayed at any time by pressing the VxA button. The power is displayed to a resolution of 0·01 Watts.

Fast, Simple and Safe to use

The user interface of the QL series II has been carefully designed to provide rapid control whilst guarding against any possibility of error.

Voltage and current setting can be performed either by direct numeric entry or, for applications where the voltage or current must be gradually changed, by using the quasi-analogue Jog control.

To enable the current limit to be set before connecting the load, the limit setting is displayed when the output is off. Pressing the View Limits key at any time provides a temporary display of the limit values allowing precise adjustment to also be made with the output on.

Setting Memories for Added Convenience

The QL series II provides storage of up to 50 power supply sets-ups in non-volatile memory for each main output, plus (T models only) a further 50 set-ups for linked mode operation, plus 10 set-ups for the auxiliary output. Upon mains switch-off, the set-up of the PSU is saved and is automatically restored at switch-on.

OVP and OCP Trips with 'Alarm' Output

The QL series II provides fully adjustable over-voltage and over-current trips which can be used both as a fail-safe against accidental mis-setting and as a protection against inappropriate load conditions. In addition to turning the output off, a trip condition switches the rear panel alarm signal enabling other equipment to be controlled.

For complete protection of the power supply, the trip will also be operated by over-temperature or excess voltage on the sense terminals.

Auxiliary Output with Fully Variable Voltage (T models)

The QL series II triple output power supplies incorporate an auxiliary output which is fully variable between 1 volt and 6 volts to a resolution of 0.01V, and has a current capability of 3 amps.

A front panel button enables to voltage and current for the auxiliary output to be viewed on the Output 1 display whenever required.

Fully Programmable via GPIB, RS232, USB or LAN

The programmable ‘P’ models incorporate a full bus interface permitting remote control and readback via either GPIB (IEEE-488), RS232, USB or LAN.

The GPIB interface conforms fully with IEEE-488.2 and IEEE-488.1.

The RS232 interface uses a standard 9-pin D-connector and has a Baud rate variable from 600 to 19200.

The USB interface is compatible with USB 2.0 and USB 1.x.

The LAN interface is 1.4 LXI Core 2011 compliant.

The QL series II uses simple and consistent command structures which make programming particularly easy regardless of which interface is used.

An IVI driver for Windows is included. This provides support for common high-level applications such as LabView*, LabWindows*, and HP/Agilent VEE*.

All power supply settings can be controlled via the bus. Voltage and current can be set to a resolution of 1mV or 0·1mA (main outputs). Actual voltage and current can be read back together with the power supply status.

* LabView LabWindows is a trademark of National Instruments Corp. Agilent VEE is a trademark of Agilent Technologies inc.

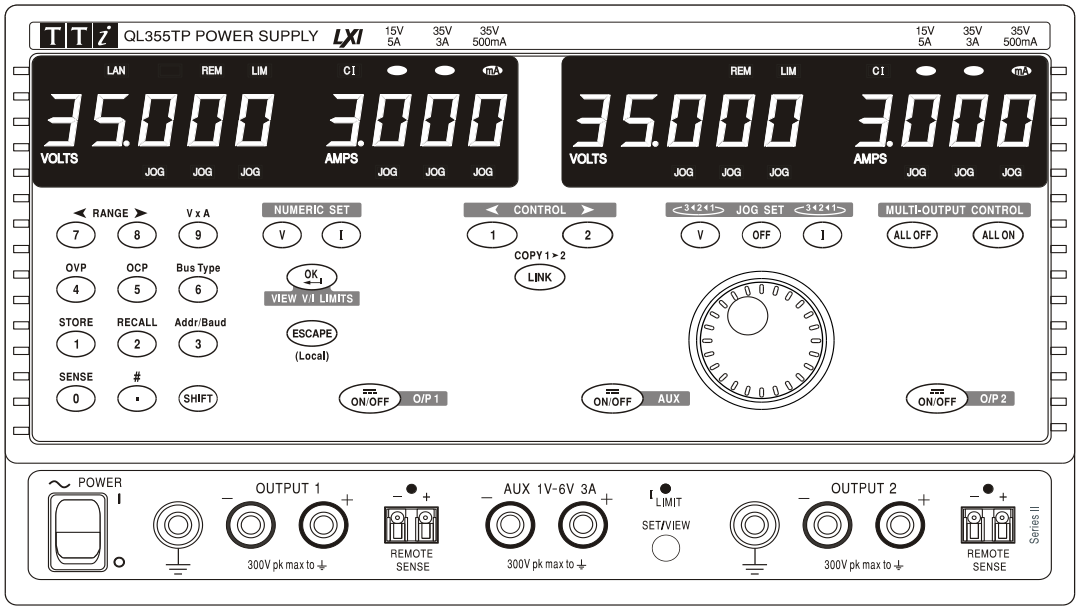

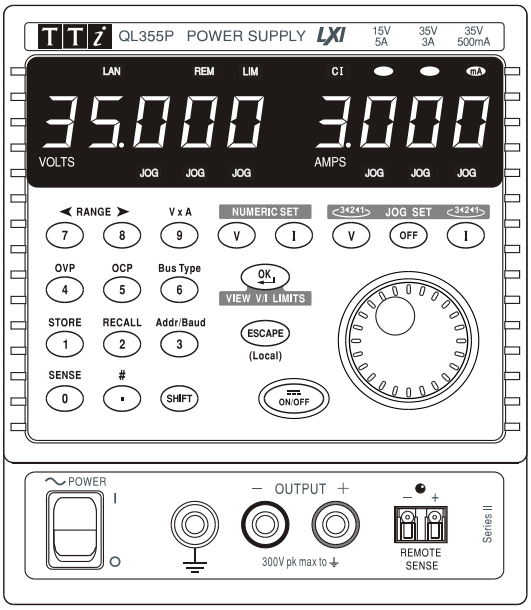

General specifications apply for the temperature range 5°C to 40°C. Accuracy specifications apply for the temperature range 18°C to 28°C after 1 hour warm-up with no load and calibration at 23°C. Typical specifications are determined by design and are not guaranteed.

MAIN OUTPUTS

	QL355	QL564
Voltage/Current Ranges:	0V to 35V/0·001A to 3A 0V to 35V/0·1mA to 500mA 0V to 15V/0·001A to 5A	0V to 56V/0·001A to 2A 0V to 56V/0·1mA to 500mA 0V to 25V/0·001A to 4A
Voltage Setting:	Resolution 1mV Accuracy ± (0·03% + 5mV)	
Current Setting:	Resolution 1mA; 0·1mA on 500mA range Accuracy ± (0·2% + 5mA); ± (0·2% + 0·5mA) on 500mA range.	
Output Mode:	Constant voltage or constant current with automatic cross-over. CI indicator lit in constant current mode.	
Output Switch:	Electronic, non isolating. Switch illuminated when Output on. Preset voltage and current limit displayed when Output off.	
Output Terminals:	Universal 4mm safety binding posts on 19mm (0·75”) pitch for Output; screwless terminals for Sense. Duplicate rear panel Output and Sense screw terminals on P models.	
Transient Response:	<50μs to within 15mV of set level for a change in load current from full load to half load or vice versa.	
Voltage Programming Speed:	Maximum time required for output to settle within 1% of its total excursion (for resistive load). Excludes command processing time.	

		QL355			QL564	
		Full Load	*No Load*		*Full Load*	*No Load*
Up	15V 5A	6ms	6ms	25V/4A	10ms	6ms
Up	35V 3A	20ms	7ms	56V/2A	40ms	15ms
Up	35V 500mA	200ms	40ms	56V/500mA	300ms	60ms
Down	15V 5A	6ms	250ms	25V/4A	10ms	400ms
Down	35V 3A	25ms	600ms	56V/2A	50ms	800ms
Down	35V 500mA	120ms	600ms	56V/500mA	200ms	800ms

Ripple and Noise (20MHz bandwidth):	Normal mode voltage: <0·35mVrms and 2mVp-p Normal mode current: <0·2mArms; <20μArms on 500mA range.
Load Regulation:	For any load change, measured at the output terminals, using remote sense. Voltage <0·01% + 2mV. Current <0·01% + 250μA; <0.01% +50μA on 500mA range. Add typically 2·5mV for a 0·5V drop in the positive output lead. Specification applies for sense lead resistance <0·5Ω.
Line Regulation:	Voltage <0·01% + 2mV for 10% line change. Current <0·01% + 250μA; <0.01%+ 50μA on 500mA range.
Temperature Coefficient:	Voltage: typically <(50ppm + 0·5mV)/°C Current: typically <(100ppm + 1mA)/°C; typically<(100ppm + 0·1mA)/°C on 500mA range.
Output Protection:	Output will withstand forward voltages of up to 20V above rated output

	voltage. Reverse protection by diode clamp for currents up to 3A.
Over-voltage Protection: (OVP)	Range 1V to 40V (QL355), 1V to 60V (QL564) Resolution 0·1V; accuracy ± (2% + 0·5V) Response time typically 100µs
Over-current Protection: (OCP)	Range 0·01A to 5·5A (QL355), 0·01A to 4·4A (QL564) Resolution 0·01A; accuracy ± (0·2% + 0·01A) Response time typically 35ms
Protection Functions:	Output trips off for OVP, OCP, over-temperature and Sense miswiring

METER SPECIFICATIONS (Main Outputs)

Display Type:	5-digit (Volts), 4-digit (Amps), 14mm (0·56") LED.
Voltage (CI mode):	Resolution 10mV Accuracy ± (0·1% of reading + 10mV)
Current (CV mode):	Resolution 0·001A; 0·1mA on 500mA range Accuracy ± (0·2% + 0·005A); ± (0·2% + 0·5mA) on 500mA range
V x A:	Resolution 0·01W; 0·001W on 500mA range Accuracy ± (0·3% + 0·05W); ± (0·3% + 0·005W) on 500mA range

AUXILIARY OUTPUT (T models only)

Voltage Range:	1V to 6V
Voltage Setting:	Resolution: 10mV Accuracy: ± 0.5% ±10mV
Current Limit:	3A minimum
Output Switch:	Electronic, non isolating. Switch illuminated when Output on.
Output Terminals:	Universal 4mm safety binding posts on 19mm (0·75”) pitch. Duplicate screwless terminals on rear panel.
Output Protection:	Output will withstand up to 16V forward voltage. Diode clamp reverse protection for currents up to 1A. Over-current trip.
Ripple & Noise: (20MHz bandwidth)	<2mV rms, 10mVp-p
Load & Line Regulation:	<1·0% for a 90% load change; 0·1% for a 10% line change.
Status Indication:	Current limit lamp. Current overload trip indication.
Meter Specifications: (use SET/VIEW button)	Voltage Meter: Resolution 10mV, accuracy ± 0.5% ±10mV Current Meter: Resolution 10mA, accuracy ± 0.5% ±10mA
Voltage Programming Speed:	Maximum time required for output to settle within 1% of its total excursion (for resistive load). Excludes command processing time. 1V to 6V: 10ms, no load and full load 6V to 1V: 10ms, no load and full load

KEYBOARD & ROTARY CONTROL

All functions, including the selection and set-up of the remote control interfaces, can be set from the keyboard. The rotary jog control can be used to adjust output voltage and current settings in a quasi-analogue mode.

ALARM OUTPUT

Isolated rear-panel open-collector output signal. User can select output to be activated for either OVP, OCP, Overtemperature or Sense miswiring, or for any of those four faults.

DIGITAL INTERFACES (P models only)

Full digital remote control facilities are available through the RS232, USB, LAN and GPIB interfaces.

General

RS232:	Standard 9-pin D-connector. Variable Baud rate (600 to 19200).
GPIB (G models only):	Conforming with IEEE488.1 and IEEE488.2
USB:	Standard USB 2.0 hardware connection. Operates as a virtual COM port.
LAN:	Ethernet 100/10base-T hardware connection. 1.4 LXI Core 2011.
Remote Command Processing Time:	Typically <25ms between receiving the command terminator for a step voltage change at the instrument and the output voltage beginning to change.
Status Indication:	Remote mode and LAN status indicators

Main Outputs

Voltage Setting:	16-bit; Resolution 1mV, accuracy ± (0·03% +5mV)
Current Setting:	16-bit; Resolution 0.1mA, accuracy ± (0·2% + 5mA)
	Resolution 0.01mA, Accuracy ± (0·2% + 0·5mA) on 500mA range.
Readback V & I	See meter specifications.

Auxiliary Output (T models only)

Voltage Setting:	Resolution 10mV, accuracy ± 0.5% ±10mV
Current Setting:	Resolution 10mA, accuracy ± 0.5% ±10mA
Readback V & I	See meter specifications

GENERAL

AC Input:	230V AC or 115V AC ± 10%, 50/60Hz Installation Category II
Power Consumption:	Single output: 250VA max; Triple output: 500VA max.
Operating Range:	+5ºC to +40ºC, 20% to 80% RH
Storage Range:	–40ºC to + 70ºC
Environmental:	Indoor use at altitudes up to 2000m, Pollution Degree 2.
Cooling:	Intelligent variable-speed fan. Over-temperature trip shuts down output if internal temperatures exceed predetermined thresholds.
Store/Recall:	Up to 50 set-ups each main output, 50 linked set-ups, and 10 auxiliary output settings can be saved and recalled via the keyboard or remote interfaces.
Safety:	Complies with EN61010-1 & EN61326-1. For details, request the EU Declaration of Conformity for this instrument via http://www.aimtti.com/support (serial no. needed).
Size:	Single output: 140 x 160 x 290mm (WxHxD), excl. feet & terminals. Triple output: 280 x 160 x 290mm (WxHxD), excl. feet & terminals
Weight:	Single: 5.5kg; Triple: 10·5kg

This power supply is a Safety Class I instrument according to IEC classification and has been designed to meet the requirements of EN61010-1 (Safety Requirements for Electrical Equipment for Measurement, Control and Laboratory Use). It is an Installation Category II instrument intended for operation from a normal single phase supply.

This instrument has been tested in accordance with EN61010-1 and has been supplied in a safe condition. This instruction manual contains some information and warnings which have to be followed by the user to ensure safe operation and to retain the instrument in a safe condition.

This instrument has been designed for indoor use in a Pollution Degree 2 environment in the temperature range 5°C to 40°C, 20% - 80% RH (non-condensing). It may occasionally be subjected to temperatures between +5°C and –10°C without degradation of its safety. Do not operate while condensation is present.

Use of this instrument in a manner not specified by these instructions may impair the safety protection provided. Do not operate the instrument outside its rated supply voltages or environmental range.

WARNING! THIS INSTRUMENT MUST BE EARTHED

Any interruption of the mains earth conductor inside or outside the instrument will make the instrument dangerous. Intentional interruption is prohibited. The protective action must not be negated by the use of an extension cord without a protective conductor.

When the instrument is connected to its supply, terminals may be live and opening the covers or removal of parts (except those to which access can be gained by hand) is likely to expose live parts. The apparatus shall be disconnected from all voltage sources before it is opened for any adjustment, replacement, maintenance or repair.

Capacitors inside the power supply may still be charged even if the power supply has been disconnected from all voltage sources but will be safely discharged about 10 minutes after switching off power.

Any adjustment, maintenance and repair of the opened instrument under voltage shall be avoided as far as possible and, if inevitable, shall be carried out only by a skilled person who is aware of the hazard involved.

If the instrument is clearly defective, has been subject to mechanical damage, excessive moisture or chemical corrosion the safety protection may be impaired and the apparatus should be withdrawn from use and returned for checking and repair.

Make sure that only fuses with the required rated current and of the specified type are used for replacement. The use of makeshift fuses and the short-circuiting of fuse holders is prohibited.

Do not wet the instrument when cleaning it.

The following symbols are used on the instrument and in this manual:-

⏚	Earth (ground) terminal.
O	mains supply OFF.
I	mains supply ON.
∿	alternating current (ac)
⎓	direct current (dc)

Check that the instrument operating voltage marked on the rear panel is suitable for the local supply. Should it be necessary to change the operating voltage, proceed as follows:

1) Disconnect the instrument from all voltage sources.
2) Remove the screws which retain the top cover and lift off the cover.
3) Change the connections on both transformers following the appropriate diagram below:

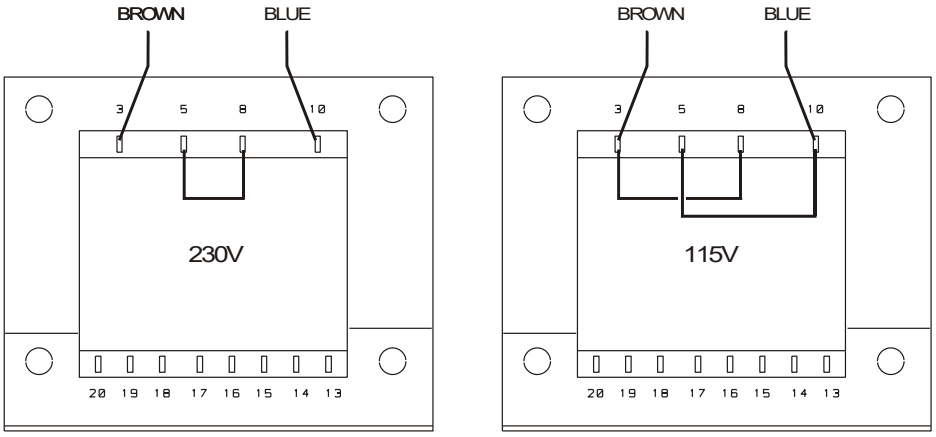

4) Refit the cover and the secure with the same screws.
5) To comply with safety standard requirements the operating voltage marked on the rear panel must be changed to clearly show the new voltage setting.
6) Change all three fuses to ones of the correct rating, see below.

Fuse

The AC inlet fuse is located in the fuse drawer in the lower part of the IEC inlet connector. To change the fuse remove the line cord and open the fuse drawer with a suitable tool.

QL355, QL355P, QL564 & QL564P
The correct mains fuse type is 20 x 5mm 250V HBC time-lag with the following rating:

for 230V operation:	1.6A (T) 250V HBC
for 115V operation:	3.15A (T) 250V HBC

QL355T, QL355TP, QL564T & QL564TP
The correct mains fuse type is 20 x 5mm 250V HBC time-lag with the following rating:

for 230V operation:	4A (T) 250V HBC
for 115V operation:	8A (T) 250V HBC

In addition, the two transformers are individually fused inside the power supply. To access these fuses remove the cover as described above; both fuses are clipped to the small PCB which is fitted directly onto the pins of the IEC inlet connector itself.

The correct fuse type is 20 x 5mm 250V HBC time-lag with the following rating:

for 230V operation:	1.6A (T) 250V HBC
for 115V operation:	3.15A (T) 250V HBC

Make sure that only fuses with the required current rating and of the specified type are used for replacement. The use of makeshift fuses and the short-circuiting of fuseholders are prohibited.

Mains Lead

Connect the instrument to the AC supply using the mains lead provided. Should a mains plug be required for a different mains outlet socket, a suitably rated and approved mains lead set should be used which is fitted with the required wall plug and an IEC60320 C13 connector for the instrument end. To determine the minimum current rating of the lead-set for the intended AC supply, refer to the power rating information on the equipment or in the Specification.

WARNING! THIS INSTRUMENT MUST BE EARTHED.

Any interruption of the mains earth conductor inside or outside the instrument will make the instrument dangerous. Intentional interruption is prohibited.

Mounting

This instrument is suitable both for bench use and rack mounting. It is delivered with feet for bench mounting. The front feet include a tilt mechanism for optimal panel angle.

A rack kit for mounting QL Series power supplies is available from the Manufacturers or their overseas agents. The rack will accommodate 1, 2 or 3 single units or a triple and single unit; a blanking piece is also available for unused positions in the rack.

Ventilation

The power supply is cooled by an intelligent multi-speed fan which vents at the rear. Take care not to restrict the air inlets at the side panels or the exit at the rear. In rack-mounted situations allow adequate space around the instrument and/or use a fan tray for forced cooling.

Connections

Front Panel Connections

The loads should be connected to the positive (red) and negative (black) terminals marked OUTPUT 1, OUTPUT 2, or AUX.

Remote sense connections to the loads on Outputs 1 or 2, if required, are made from the corresponding positive (+) and negative (–) REMOTE SENSE terminals. Remote sense operation is selected from the keyboard or via a remote control interface (P models only); the REMOTE SENSE lamp is lit when remote sense is selected. Switching off remote sense returns the instrument to local sensing at the output terminals.

The terminal marked ⏚ is connected to the chassis and safety earth ground.

Rear Panel Connections

Main Output Terminals (P models only)

The output and sense terminals are duplicated on the rear panel screw-terminal block marked Output +, Output –, Sense + and Sense – ; these connections are paralleled with their front panel equivalents.

Remote sense operation is selected from the keyboard or via a remote control interface. When the rear panel terminals are used, remote sense should always be selected to ensure that output regulation is maintained within specification.

Auxiliary Output Terminals (T models only)

The front panel AUX OUTPUT terminals are duplicated on the rear panel with screwless terminals marked AUXILIARY OUTPUT.

Alarm Outputs

Associated with each main output are recessed 2-pin connectors marked Alarm. These provide access to an opto-isolated NPN switching transistor, the function of which can be set from the keyboard, see the Alarm Output section of this manual.

The maximum operating voltage that can be applied across the terminals is 20VDC and the maximum sink current for the switch 'closure' is 1mA.

⚠ Do not apply external voltages between the terminals exceeding 30VDC.

RS232 (P models only)

9–pin female D–connector with pin connections as shown below. Can be connected to a standard PC port using a fully wired 1:1 male-female cable without any cross-over connections.

Pin	Name	Description
1	RI	Passively asserted (+V through 10kΩ)
2	TXD	Transmitted data from instrument
3	RXD	Received data to instrument
4	CTS	
5	GND	Signal ground
6	RTS	Passively asserted (+V through 10kΩ)
7	DSR	No internal connection
8	DTR	
9	CD	No internal connection

Signal ground is connected to instrument ground.

USB (P models only)

The USB port is connected to instrument ground. It conforms with USB 2.0 (Full Speed) and accepts a standard USB cable. The Windows plug-and-play functions should automatically recognise that the instrument has been connected. If the correct driver is not found, follow the Windows on-screen prompts and select the driver files downloaded from the AIM-TTi support website (www.aimtti.com/support).

LAN (P models only)

The LAN interface is designed to meet 1.4 LXI (Lan eXtensions for Instrumentation) Core 2011. . Remote control using the LAN interface is possible using a TCP/IP Socket protocol. The instrument also contains a basic Web server which provides information on the unit and allows it to be configured. Since it is possible to misconfigure the LAN interface, making it impossible to communicate with the instrument over LAN, a LAN Configuration Initialise (LCI) mechanism is provided via a recessed switch on the rear panel (marked LAN RESET) to reset the unit to the factory default.

Further details are given in the Remote Operation chapter. For more information on LXI standards refer to www.lxistandard.org/home

GPIB (G models only)

The GPIB signal grounds are connected to the instrument ground. The implemented subsets are:

SH1 AH1 T6 TE0 L4 LE0 SR1 RL2 PP1 DC1 DT0 C0 E2

The GPIB address is set from the front panel.

This section of the manual is a general introduction to the controls and operation of the instrument and is intended to be read before using the power supply for the first time.

In this manual front panel keys, connections and display indicators are shown in capitals, e.g. STORE, ESCAPE, OUTPUT, JOG. Messages shown on the 7-segment display are printed in a different type-font, e.g. **StorE, GPIb, triP** in upper or lower case to represent the characters as they are shown on the 7-segment display.

Switching On, Output On/Off

The power switch is located at the bottom left of the front panel.

At power-up the default behaviour is for the instrument's settings to be restored to those automatically saved when it was switched off, but with all outputs always off. However, the user can change the default setting such that selected outputs are restored at power-up to their status at power-down, see the Extra Functions section.

The DC outputs are switched electronically with their respective ON/OFF keys; the key illuminates when the output is on. In addition, all outputs can be switched on and off together using the ALL ON and ALL OFF keys.

Synchronous Output On/Off Switching (T models only)

Pressing ALL OFF at any time will synchronously turn off any outputs that are on; under the same load conditions outputs will typically turn off within 1ms of each other. With all outputs off the ALL OFF key is illuminated green. Pressing the ALL ON key when all the outputs are off will turn all the outputs on synchronously; outputs with identical settings and load conditions will typically turn on within 1ms of each other. However, if one output is already on, pressing ALL ON will turn the remaining outputs on but the turn-on delay between the outputs will be up to 80ms, even with the same output setting and load conditions.

Keypad

Only the principles of operation are outlined here; the setting of individual parameters is given in detail in later sections.

The paramount consideration in designing the user interface has been to make changing settings as 'safe' as possible (i.e. with minimal risk of accidentally applying excessive voltages to a target system) whilst achieving ease of use. This has been achieved by requiring the user to confirm (OK) new numeric settings, with the option to ESCAPE at any point or even to simply pause until the operation times-out and the instrument returns to its original settings.

In addition a buzzer, illuminated keys, LED indicators and display messages prompt, guide or warn the user such that entry or control errors are minimised. Where some of these features (e.g. beeps or flashing indicators) are considered unnecessary by regular users, the option exists to disable them, see the Extra Functions section.

On triple output (T) models the ability to change settings from the keypad or by using the Jog controls is assigned to Output 1, Output 2 or both by using the 1, 2 or LINK ◀ CONTROL ▶ keys respectively. The key (1 or 2) associated with the selected output illuminates to show which output is under control. In LINK mode (both keys lit) both outputs are controlled at the same time, including some of the shifted operations (RANGE, STORE, RECALL and V x A). The further descriptions that follow apply to either or both main outputs as appropriate to the setting indicated by the illumination of the ◀ CONTROL ▶ keys.

Under normal conditions the numeric keypad is disabled; pressing any key will cause the buzzer to make a double beep, indicating an illegal operation. To set a voltage or current with the keypad press the V or I NUMERIC SET key; the appropriate display shows 0·000V or 0·000A with the digit to the left of the decimal point flashing. Digits are entered in response to the flashing prompt, together with the decimal point at the appropriate time, and the entry is confirmed with the OK key. If OK is not pressed within 10 seconds of the last numeric key the entry is cancelled and the display returns to its original setting. If ESCAPE is pressed anywhere in the entry procedure, entry is cancelled and the display returns to its original setting.

The OK key is used to confirm most keypad entries. At all other times it becomes the VIEW V/I LIMITS key and pressing it will cause the display to show preset output voltage and current limit for 3 seconds; during this period the LIM indicator in the display flashes.

Pressing SHIFT illuminates the key and gives the numeric keys the functions marked above them (e.g. STORE, RECALL, etc.). When a function is selected by pressing one of these keys SHIFT is cancelled (the SHIFT key is no longer lit). The further key presses required to complete the selected function are described in detail in the sections that follow; if no key is pressed within 10 seconds to complete the function, the function will terminate as if ESCAPE has been pressed. SHIFT is a toggle key; pressing SHIFT again when it has been selected will cancel SHIFT. SHIFT is also cancelled by ESCAPE, or by pressing SET V or SET I. Note that in LINK mode settings accessed by STORE and RECALL are specific to the LINK mode and are in addition to settings accessible when STORE and RECALL are used on individually selected outputs.

Jog Control

The rotary 'jog' control permits the output voltage or current limit to be incremented or decremented in steps with a resolution set by the JOG SET keys; the output immediately follows the setting, i.e. no OK is required.

At power-up jog is always off. To jog the voltage or current setting press the V or I JOG SET key; the key will illuminate and the JOG indicator under the digit that was last jogged will flash. Whilst the V or I JOG SET key is lit, each further press of the V or I key moves the JOG indicator one digit to the left; the selection 'wraps-round' such that when the largest value of jog increment has been reached the next press returns it to the lowest. The default position at power-up is under the LSD, i.e. the lowest jog increment is selected.

Turning the rotary jog control clockwise/anti-clockwise increments/decrements the selected digit; digits to the left of the one being jogged are automatically incremented/decremented when the decade overflow/underflow point is reached. Digits to the right of the one being jogged remain unchanged unless the jog step overflows/underflows the range maximum/minimum in which case they are set to zero. On the QL355, for example, 33·65V goes to 34·65V goes to 35·00V for the 35V range and a 1V jog increment; 0·160A goes to 0·060A goes to 0·001A for a 0·1A jog decrement.

The jog steps that can be selected for the main range are 1mV, 10mV, 100mV and 1mA, 10mA, 100mA; if the 500mA range has been selected the current increment steps are 0·1mA, 1mA, 10mA.

To disable the jog rotary control press the JOG SET OFF key; reselecting JOG SET V or I will enable jog on the last used digit position. Jog is not cancelled by using numeric entry or any of the SHIFT functions but it is disabled whilst that function is enabled.

When in constant voltage mode, with the output on, the right-hand display will show actual current rather than current limit. If JOG SET I is selected the JOG indicator under the selected digit will flash at half-speed ('lazy' flash). To observe the effect of jogging the current limit it will be necessary to either turn the output off (so that the display permanently shows the current limit) or to press VIEW V/I LIMITS which causes the current limit to be displayed until 3 seconds after movement of the jog control ceases. The 'lazy' flash is also used when JOG SET V has been selected and actual voltage is being shown because the supply has gone into current limit.

The factory default is to flash the JOG indicator under the selected digit for the whole time that jog is selected so that the user is constantly reminded which parameter can be incremented/ decremented. Where this degree of reminding is considered inadequate the user can select, using the Extra Functions capability, to flash the digit itself; conversely, where the flashing is considered intrusive the user can select to not flash the JOG indicator (except when the 'lazy' flash is shown).

Display

The displays shows the voltage on the left (5 digits) and the current on the right (4 digits) for both the main outputs. These 7-segment displays are also used to show prompts during some of the function settings (e.g. memory store/recall or remote control address setting) using the limited 'character set' that can be achieved with a 7-segment display; these are necessarily a mixture of upper and lower case letters.

Above and below the 7-segment display are several secret-until-lit annunciators.

To the right, above the current display, are the indicators which show the selected operating range: 35V/3A, 15V/5A or 35V/500mA (QL355T & TP) or 56V/2A, 25V/5A or 56V/500mA (QL564T & TP); the indicators light beneath the range printed immediately above them and, in the case of the 500mA range, the indicator is marked mA to emphasise that the current display is now showing mA.

The other annunciators above the displays are:
CI, indicating that the instrument is in constant current mode;
LIM, which flashes when the VIEW V/I LIMITS key is pressed to show the set voltage/set current limit in the display;
REM, which lights when the instrument is under control from a remote interface (P models only) and LAN, which indicates the status of the LAN interface connection (P models only).

Below the three least significant digits of both the voltage and current displays are the JOG indicators; the appropriate indicator flashes when the jog function is being used, see the Jog Control section above.

The display of Output 1 can alternatively be used to show the voltage and current of the AUX output (T models only). Full details are given in the Auxiliary Output section.

Main Outputs

New users should first read the Initial Operation chapter which describes the operating principles of the keypad and rotary jog control. The following paragraphs describe the independent operation of either Main Output. To select which output is to be controlled by the keypad/Jog controls it is first necessary to select that output by pressing the appropriate ◂ CONTROL ▸ key (1 or 2); the key lights to show that it is the selected output.

The additional features available on the triple output (T) models in LINK mode (both Main Outputs selected) are described in the Main Outputs – Link Mode section later in this manual.

Set Voltage

The left-hand display shows the set voltage to a resolution of 1mV, except when the instrument is in constant current (CI) mode. In CI mode the actual output voltage (which will be less than the set voltage) is shown and the display resolution is 10mV; the least significant digit (1mV resolution) is always displayed as a zero.

The voltage can be set directly from the numeric keypad: press the NUMERIC SET V key, enter the new value using the numeric keys and confirm by pressing OK. The broad principles of keypad entry are explained in the Initial Operation chapter, which should be read by new users.

When SET V is pressed the display shows 0·000; a new voltage is then entered (e.g. 12·345V is entered as 1, 2, ·, 3, 4, 5) and confirmed by OK. The position of the decimal point in the display is fixed to reduce the risk of entering a wrong value. As a consequence, and to avoid the need to enter leading zeroes (e.g. 2·345V is entered as 2, ·, 3, 4, 5, OK), numbers to the left of the decimal point are shown slightly differently to the numbers to the right of the decimal point during number entry; this is self-evident during number entry.

The minimum voltage setting is 0·000V; the maximum setting for QL355 is 35·000V (15·000V on the 15V/5A range) or 56.000V (25.000V on the 25V/4A range) for QL564.

Pressing OK at any point will set the voltage entered with any remaining digits set to zero, e.g. 1, 2, ·, 3, OK will set 12·300V; 1, OK will set 1·000V; pressing OK immediately after SET V (while the display shows 0·000V) will set 0·000V.

Pressing ESCAPE at any time during the sequence, or making no further key press within 10 seconds of the previous one will cause the display to return to its original reading before SET V was pressed.

Entering a voltage outside the range maximum (including trying to enter 3 digits before the decimal point) or trying to enter more than 5 digits will cause the buzzer to beep twice; the last key entry will be ignored.

The voltage can also be set using the Jog control. Pressing JOG SET V will illuminate the V key and the JOG indicator under the digit that was last jogged will flash. Whilst the V key is lit, each further press will move the JOG indicator one digit to the left; the selection 'wraps round' such that when the largest value of jog increment has been reached the next press returns it to the lowest. The default position at power-up is under the LSD, i.e. the lowest jog increment is selected. The jog steps that can be selected are 1mV, 10mV and 100mV.

With jog enabled the output voltage can be incremented or decremented with the rotary jog control with a step resolution indicated by the position of the flashing JOG indicator. The output immediately follows the setting, i.e. no OK is required. If the output goes into constant current mode (indicated by the CI indicator flashing) the left-hand display shows actual voltage not set voltage. If JOG SET V is selected the JOG indicator under the selected digit will flash at half speed ('lazy' flash). To observe the effect of jogging the set voltage it will be necessary to either turn the output off (so that the display permanently shows the set voltage) or to press VIEW V/I LIMITS which causes the set voltage to be displayed until 3 seconds after movement of the jog control ceases.

Note that in constant current mode the actual voltage is measured and displayed to only 10mV resolution; the 1mV digit permanently displays zero.

Further details on the jog control can be found in the Initial Operation chapter.

Set Current Limit

With the output off, the right-hand display shows the current limit to a resolution of 1mA (0·1mA on the 500mA range).

The current limit can be set directly from the numeric keypad: press the NUMERIC SET I key, enter the new value using the numeric keys and confirm by pressing OK. The broad principles of keypad entry are explained in the Initial Operation chapter, which should be read by new users.

When SET I is pressed the display shows 0·000; a new current is then entered (e.g. 1·234A is entered as 1, · , 2, 3, 4,) and confirmed by OK. The position of the decimal point in the display is fixed to reduce the risk of entering a wrong value. As a consequence, and to avoid the need to enter or display leading zeroes (e.g. 0·234A is entered as ·, 2, 3, 4, OK), numbers to the left of the decimal point are shown slightly differently to the numbers to the right of the decimal point during number entry; this is self-evident during number entry.

The minimum current setting is 0·001A (0·1mA on the 500mA range); the maximum setting is 3·000A, 5·000A or 500·0mA (QL355) or 2·000A, 4·000A or 500·0mA (QL564), according to range, i.e. there is no over-range capability.

Pressing OK at any point will set the current entered with any remaining digits set to zero, e.g. 1, ·, 2, OK will set 1·200A; 1, OK will set 1·000A; pressing OK immediately after SET I (while the display shows 0·000A) will set 0·00IA.

Pressing ESCAPE at any time during the sequence, or making no key press within 10 seconds of the previous one will cause the display to return to its original reading before SET I was pressed.

Entering a value outside the range maximum (including trying to enter 2 digits before the decimal point) or trying to enter more than 4 digits will cause the buzzer to beep twice; the last key entry will be ignored.

The current limit can also be set using the rotary jog control. Pressing JOG SET I will illuminate the key and the JOG indicator under the digit that was last jogged will flash. Whilst the I key is lit, each further press will move the JOG indicator one digit to the left; the selection 'wraps round' such that when the largest value of jog increment has been reached the next press returns it to the lowest. The default position at power-up is under the LSD, i.e. the lowest jog increment is selected. The jog steps that can be selected are 1mA, 10mA and 100mA (0·1mA, 1mA and 10mA on the 500mA range).

With jog enabled the current limit can be incremented or decremented with the rotary jog control with a step resolution indicated by the position of the flashing JOG indicator. The output immediately follows the setting, i.e. no OK is required. With the output on, the right-hand display shows actual current, not current limit (except in constant current mode). If JOG SET I is selected the JOG indicator under the selected digit will flash at half speed ('lazy' flash). To observe the effect of jogging the current limit it will be necessary to either turn the output off (so that the display permanently shows the current limit) or to press VIEW V/I LIMITS which causes the current limit to be displayed until 3 seconds after movement of the jog control ceases.

Instantaneous Current Output

The current limit control can be set to limit the continuous output current to levels down to 1mA (0·1 mA on 500mA range). However, in common with all precision bench power supplies, a capacitor is connected across the output to maintain stability and good transient response. This capacitor charges to the output voltage and short-circuiting of the output will produce a current pulse as the capacitor discharges which is independent of the current limit setting.

Range Selection

The instrument has three ranges: 35V/3A, 15V/5A and 35V/500mA (QL355) or 56V/2A, 25V/4A and 56V/500mA (QL564). The selected range is shown by an illuminated indicator below the appropriate legend at the top right-hand side of the instrument; when the 500mA range is selected the indicator legend is mA to emphasise that the current meter now shows milliamps not amps.

To change range press SHIFT followed by ◀ RANGE or RANGE ▶ ; each press of ◀ RANGE selects the next range to the left; each press of RANGE ▶ selects the next range to the right; there is no 'wrap-round'. When the range is changed the indicator that represents the new range and the OK key both flash; pressing OK sets the new range. To exit without changing range press ESCAPE. Pressing any other key whilst in range change mode causes the warning buzzer to beep twice; no other action is taken. If OK is not pressed within 10 seconds of the last range change key press the range selection remains unchanged.

The range can only be changed when the output is off. Pressing the ◀ RANGE or RANGE ▶ keys with the output on will cause the output ON/OFF key (as well as the OK key) to flash. The output may be turned off with the ON/OFF key and the range then changed by pressing OK, or OK may be pressed directly in which case the output is automatically turned off and the range then changed.

If a range change causes a voltage or current limit setting to exceed the corresponding maximum of the new range the range change is accepted but the setting is made equal to the maximum of the new range.

Note that the OVP setting is not changed when the range is changed (e.g., for QL355, an OVP setting of 38V remains valid on the 15V range); it is left to the user to independently change the OVP setting if required.

Output Settings – Front Panel Lock

To avoid accidental changes to the output settings in a bench or rack set-up, front panel control of Range, Voltage, Current Limit, OVP and OCP can be ‘locked’ and ‘unlocked’ with alternate uses of the #33 function, see Extra Functions section. The output ON/OFF key remains unlocked, as does selection of remote sense. Front panel lock still operates in remote control mode (P models only) but is ignored by the remote commands.

On triple output models the AUX output voltage is also locked when Output 1 settings are locked but, additionally, the ◀ CONTROL ▶ keys remain unlocked. All outputs are locked and unlocked together if #33 is used in Link mode, see Auxiliary Output and Main Outputs-Link Mode sections.

Connection to the Load

The load should be connected to the positive (red) and negative (black) OUTPUT terminals. Both are fully floating and either can be connected to ground.

Remote Sensing

The instrument has a very low output impedance, but this is inevitably increased by the resistance of the connecting leads. At high currents this can result in significant differences between the indicated source voltage and the actual load voltage (two 20mΩ connecting leads will drop 0·2V at 5 Amps, for instance). This problem can be minimised by using short, thick, connecting leads, but where necessary it can be completely overcome by using the remote sense capability. This requires the sense terminals to be connected to the output at the load instead of at the source; insert wires into the spring-loaded REMOTE SENSE terminals and connect directly to the load.

Select remote sense by pressing SHIFT, SENSE; the OK key flashes and the lamp above the remote sense terminals lights to show that remote sense will be selected when OK is pressed. Press OK to confirm; press ESCAPE to exit without changing state. Remote sense is turned off by pressing SHIFT, SENSE again; the OK key flashes and the remote sense lamp goes off to indicate that local sense will be restored when OK is pressed. Press OK to confirm; press ESCAPE to exit without changing state.

To avoid instability and transient response problems, care must be taken to ensure good coupling between each output and sense lead. This can be done either by twisting the leads together or by using coaxially screened cable (sense through the inner). An electrolytic capacitor directly across the load connection point may also be beneficial.

The voltage drop in each output lead must not exceed 0·5 Volts.

The P models have rear panel output and sense terminals, appropriate for when the instrument is used in a rack. The rear panel sense terminals should always be used with the rear panel output connections.

Sense Miswiring Trip

The output will be tripped off if the voltage between an output terminal and its corresponding sense terminal exceeds approximately 1V; this will happen if the sense wires are wired at the load to the wrong output or if an attempt is made to draw power from the sense wires.

If the sense terminals are miswired in this way the display shows the message **`SENSE triP`** and the output is turned off. Pressing ESCAPE at this point removes the message and the display now shows the preset voltage and current limit. When the cause of the trip has been corrected the output can be turned on again.

Series or Parallel Connection with Other Outputs

The outputs of the power supply are fully floating and may be used in series with other power supply units to generate high DC voltages up to 300V DC. It should be noted that the unit can only source current and cannot sink it, thus units cannot be series connected in anti-phase.

The maximum permissible voltage between any terminal and earth ground (⏚) is 300VDC.

WARNING! Such voltages are exceedingly hazardous and great care should be taken to shield the output terminals for such use. On no account should the output terminals be touched when the unit is switched on under such use. All connections to the terminals must be made with the power switched off on all units.

The unit can be connected in parallel with others to produce higher currents. Where several units are connected in parallel, the output voltage will be equal to that of the unit with the highest output voltage setting until the current drawn exceeds its current limit setting, upon which the output will fall to that of the next highest setting, and so on. In constant current mode, units can be connected in parallel to provide a current equal to the sum of the current limit settings.

Note that the output terminals are rated at 30A maximum; if several outputs are operated in parallel to source higher currents than this the junction should be made at a separate point, not one of the terminals.

Over-Voltage Protection

Over-Voltage Protection (OVP) can be set from 1·0V to 40V (QL355) or to 60V (QL564). If the output voltage exceeds the set OVP the output is immediately shut down (typically within 100µs), thus avoiding damage to the circuit under test. The OVP circuit will protect against accidental excessive voltage settings from the front panel or via the remote control interfaces, external voltages impressed across the output terminals, or a failure in the control circuitry of the instrument itself.

To set OVP press SHIFT, OVP; the 100mV step JOG indicator will start flashing and the jog rotary control can be used to increment/decrement the OVP setting in 100mV steps. Press OK to confirm the new setting; to exit without entering a new value press ESCAPE. The factory default settings are 40·0V (QL355) and 60V (QL564).

If the OVP is tripped the display shows the message **`OUP triP`** and the output is turned off. Pressing ESCAPE at this point removes the message and the display now shows the preset voltage and current limit. When the cause of the OVP has been removed (or the OVP limit changed) the output can be turned on again.

Note that the OVP setting is not changed when the range is changed (e.g., for QL355, an OVP setting of 38V remains valid on the 15V range); it is left to the user to independently change the OVP setting if required. Note also that it is possible and valid to set OVP below the set voltage. If the supply is in constant current mode the output voltage will be below the set voltage; OVP could

be set such that is was above the actual output voltage but below the set voltage. This could be used to trip the output under a fault condition which caused the load impedance to increase and the actual output voltage to therefore rise above the OVP point.

Over-Current Protection

Over-Current Protection (OCP) can be set from 0·01A to 5·5A (QL355) or to 4.4A (QL564). If the output current exceeds the set OCP the output is shut down (typically within 35ms).

To set OCP press SHIFT, OCP; the 10mA step JOG indicator will start flashing and the jog rotary control can be used to increment/decrement the OCP setting in 10mA steps. Press OK to confirm the new setting; to exit without entering a new value press ESCAPE. The factory default setting is 5·50A (QL355) or 4.4A (QL564).

If the OCP is tripped the display shows the message **OCP triP** and the output is turned off. Pressing ESCAPE at this point removes the message and the display now shows the preset voltage and current limit. When the cause of the OCP has been removed (or the OCP limit changed) the output can be turned on again.

Note that as with OVP, the OCP setting is not changed when the range is changed.

Note also that is possible and valid to set OCP below the set current limit. For example, the power supply may be used to repetitively test a unit under test (UUT) which normally takes a peak current of, say, 2 Amps. However, a faulty UUT would take a current of more than 2 Amps and would be damaged by being left in a 2 Amp current-limited state. In this case the current limit could be set to 2·1A, say, and the OCP set to 2·0A to ensure that a faulty UUT will trip the supply off.

Output Protection

In addition to OVP and OCP for forward over-voltage and over-current protection, the output is protected from reverse voltages by a diode; the continuous reverse current must not exceed 3 Amps although transients can be much higher.

Output Power (V x A)

If SHIFT, V x A is pressed the voltage display shows the product of measured output voltage x measured current and the current display shows **UA** ; the output power reading is continuously updated at the normal measurement rate. Output Power mode is cancelled by pressing either ESCAPE or V x A again. Jog is temporarily disabled (and the JOG indicators are turned off) during the V x A display.

Temperature Trip

If the safe internal temperature limit is exceeded because, for example, the fan vents have been blocked, the output is turned off and the display will show **OtP triP**. Pressing ESCAPE at this point will do one of two things:

i. If the over-temperature condition has already cleared the message will be removed and the display will show preset voltage and current limit. Assuming the cause of the over-temperature has been rectified the output can be turned on again.

ii. If the instrument is still above the safe temperature limit the **OtP triP** message will flash slowly ('lazy' flash) until the instrument has cooled, at which point the display will show preset voltage and current limit again. Assuming the cause of the over-temperature has been rectified the output can be turned on again.

Alarm Output

The recessed 2-pin connector on the rear panel is directly connected to an opto-coupled NPN switching transistor (pin 1 emitter, pin 2 collector) which is turned on (i.e. switch 'closure') according to the conditions specified in the Extra Functions section, see later. The default condition is switch closure for any trip condition (OVP, OCP, SENSE or OTP). The maximum open-circuit voltage permitted across the switch is 30VDC and the nominal sink current for switch closure is 1mA.

Store Settings

The instrument can store 50 set-ups for each output in non-volatile memory; the parameters stored are range, voltage, current limit, OVP and OCP. The output state and remote sense setting are not stored. In addition, a further 50 Link Mode set-ups can be saved, see Main Outputs – Link Mode section.

To store a set-up, first press SHIFT, STORE; the display shows **Sto.** on the left with the store number (**0** to **49**) and store status (either **E** for store Empty or **F** for store Full) on the right. The SHIFT function is cancelled (the light goes off) at this point. The store number (0 to 49) can be set directly from the keypad or by using the Jog control to increment/decrement the displayed number; the JOG indicator beneath the store number flashes to indicate that the Jog control is active. Set the required store number by either method and press OK to store the settings and return the display to showing V & I. The store function can still be used when the output settings have been 'locked' using the #33 function. A full store can be overwritten with new settings. At any time before the OK key is pressed the store function can be exited without saving a set-up by pressing ESCAPE or by waiting 10 seconds from the last key entry.

Deleting Stored Settings

Any store can be returned to 'empty' as follows: press SHIFT, STORE, and set the required store number via keypad or Jog control as described above; at that point press ●. The display now shows **dEL** in place of **Sto** , e.g. **dEL 29 F** ; pressing OK deletes the content of the store. All of the output's stored set-ups can also be deleted simultaneously by using the #98 function, see Extra Functions section.

Recall Settings

To recall a set-up, first press SHIFT, RECALL; the display now shows **rEC.** on the left with the store number (**0** to **49**) and store status (either **E** for store Empty or **F** for store Full) on the right as each store is either selected in turn using the Jog control, or is set from the keypad (as for storing set-ups, see above). The SHIFT function is cancelled (the light goes off) at this point. If the store selected is full (**F**), the display changes to a flashing preview of the V & I values of that store; press OK to recall the settings of the store and return the display to showing V & I. If the store selected is empty (**E**), the display flashes **----- ----** to indicate this. It is not possible to recall an 'empty' store (pressing OK gives a warning beep); either select a full store or press ESCAPE to exit Recall. Recall cannot be used if the output has been 'locked'.

At any time before the OK key is pressed the Recall function can be exited without recalling a set-up by pressing ESCAPE or by waiting 10 seconds from the last key entry.

Settings may be recalled with the output on or off. However, if the recalled setting involves a range change the output is turned off to avoid any 'glitches'. After pressing SHIFT, RECALL, and setting the store number, the ON/OFF key will flash (as well as the OK key) if completing the recall involves a range change. The output may be turned off with the ON/OFF key and the recall then completed by pressing OK, or OK may be pressed directly in which case the output is automatically turned off and the recall completed.

Extra Functions

Variations on some of the factory default functions can be set by the user by using the # extra functions facility. Each function change, detailed in the list below is accessed by pressing SHIFT, #, nn, when nn is the 2-digit number in the list below; the display changes to **HASH No._** after SHIFT, # and the buzzer gives a confirmation beep when the 2-digit number entry is complete. As indicated in the opening paragraph of this section, the # functions can be set independently (i.e. differently) for each main output; note, however, that the #02, #03 and #21 functions which apply to the Auxiliary Output can only be set when ◂ CONTROL ▸ is assigned to Output 1.

The settings of each Main Output can be 'locked'/'unlocked' individually by using #33 with the ◂ CONTROL ▸ assigned to the respective output; on T models the AUX settings are also locked/unlocked when Output 1 is locked/unlocked. The settings of all outputs are locked/unlocked together if #33 is used with ◂ CONTROL ▸ set to LINK mode.

# Code	Function
00	Main Output always off at power-up (factory default)
01	Main Output status at power-up the same as at last power-down
02	Aux Output (T models only) always off at power up (factory default). Set with control assigned to Output 1.
03	Aux Output (T models only) status at power up the same as at last power down. Set with control assigned to Output 1.
20	Alarm output 'open' for main Output off, 'closed' for main Output on
21	Alarm output 'closed' when Aux Output is in Current Limit. Set with control assigned to Output 1; applies to Output 1 alarm only.
22	Alarm output 'closed' when over-temperature trip occurs
23	Alarm output 'closed' when sense trip occurs
24	Alarm output 'closed' when over-current trip occurs
25	Alarm output 'closed' when over-voltage trip occurs
26	Alarm output 'closed' when any trip occurs (factory default)
30	Buzzer off
31	Buzzer on (factory default). A single beep indicates confirmation, a double beep indicates a wrong entry.
33	Lock/Unlock settings. Note that the AUX output settings are locked with Output1.
40	Jog digit flashes, JOG indicator only flashes when jog is 'hidden'
41	JOG indicator always flashes, except when 'hidden' (factory default)
42	JOG indicator doesn't flash, except when 'hidden' (lazy flash)
91	Loads default calibration parameters. Refer to Service Guide
92	Shows firmware version number in the display
93	Sets these # settings to their factory default
94	Loads Factory Default settings (see below)
98	Clears all the output's set-up memories. AUX output always cleared with O/P1. In LINK mode, clears all memories in all modes (O/P1, O/P2, AUX & LINK).
99	Enter calibration mode. Refer to Service Guide.

Factory Default Settings

The ex-factory default settings (which will apply at first power-up) are as follows:

Range:	QL355: 35V/3A	QL564: 56V/2A
Voltage:	QL355: 1.000V	QL564: 1.000V
Current Limit:	QL355: 1.000A	QL564: 1.000A
OVP:	QL355: 40V	QL564: 60V
OCP:	QL355: 5.5A	QL564: 4.4A
Output:	Output off; local Sense	
# Settings:	00	Main Output always off at power-up
	02	Aux Output always off at power up (an Output 1 # function only).
	26	Alarm output 'closed' when any trip condition occurs
	31	Buzzer on
	41	JOG indicator always flashes; 'lazy' flash when hidden
RS232:	9,600 Baud (P versions only)	

Address: 11 (P versions only)

Error Messages

The following hardware errors are indicated by showing the appropriate error number in the display. The OK key will flash and if pressed the error will be ignored and operation will continue as described.

Error No.	Error Description	Action on pressing OK
1	Calibration constants corrupted at power-up	Loads default calibration parameters
2	# functions corrupted at power-up	Loads default # settings
3	Power-down settings not correctly loaded at power up	Loads factory default power-up settings

Switching the instrument off with the error message showing will leave all settings unchanged.

Main Outputs – Link Mode (T models only)

In Link mode, selected by pressing the LINK key, the key parameters of the two Main Outputs are adjusted together; when Link mode has been selected both ◂ CONTROL ▸ keys (1 and 2) are lit to show that both outputs are selected.

The following paragraphs only describe the differences between independent and linked operation; they should be read in conjunction with the corresponding paragraphs in the Main Outputs section.

Link Mode Operation – Overview

Control of the two main outputs can be "linked" so that changes are applied to both outputs simultaneously. There can be several reasons for wanting to do this:

1. **Series or Parallel Wiring**

   The user may wish to create an output with either twice the voltage or twice the current capability, see the Series or Parallel Connection with Other Outputs section on page 19. Link mode provides a convenient means for controlling the two outputs when they are series or parallel connected.

2. **Tracking Voltages (or Currents)**

   When in Link mode, using Numeric Set will set equal voltages and/or currents on the two outputs. Control of the outputs can also be linked with different voltages and/or currents set on the outputs. Use of the Jog control will then make equal changes to the two outputs.

3. **Simultaneous Recall of Stored Settings**

   Each output has its own set of 50 memories. However, when in Link mode, a further set of 50 memories is available which can store settings for both outputs. Voltages and currents can be set individually for each output and the control put into Link mode before storing. The stored settings can then be recalled to both outputs simultaneously. Using #98 in Link mode will clear all the memories of all 3 outputs in all modes, see Extra Functions section.

Notes: The existing settings for Output 1 can be duplicated on Output 2 using the Copy function before or after linking.
When in Link mode the control functions are limited to Set Range, Set Volts and Set Current (Numeric Set and Jog set), plus Store and Recall. OVP, OCP and Sense cannot be changed while in linked mode.
Control of on/off for each output remains separate when in Link mode. To switch the outputs on or off together the ALL ON/ALL OFF buttons must be used which are independent of Link mode.
Using #33 in Link mode will lock/unlock front panel control of all 3 outputs simultaneously.

Selecting Link Mode

The only constraint on selecting Link mode is that both Main Outputs must already be set to the same Range; in particular, the outputs may be linked even if their output voltage and current limit settings are different. Pressing LINK when different ranges are set will cause the buzzers to

sound twice and the Range indicator of the previously unselected output to flash for 2 seconds. Selecting Link mode will cancel any Jog selection set on either Main Output.

Set Voltage and Set Current Limit

Setting the output voltage and current limit by numeric entry or Jog control is essentially the same as for the outputs in independent mode. Using numeric entry the two outputs will be set to exactly the same new voltage and current limit, irrespective of the settings at the time the outputs were linked. Note that there can be a finite time difference between the changes on the two outputs, even if they are changing from the same initial setting; typically this time difference should be no more than 40ms (80ms max). However, if the settings were different at the time the outputs were linked, changing the voltage or current limit using the Jog control will maintain the difference between the two outputs by incrementing/decrementing each output by the same step, i.e. the outputs will 'track' each other. Tracking will be maintained until one of the outputs reaches the range limit, at which time each further Jog step will cause the buzzer to sound for that output (but with the output remaining at the range limit) whilst the in-range output continues to change, i.e. 'tracking' ceases and the outputs converge with each further step. If the increment/decrement is reversed the new (smaller) difference between the outputs is maintained until one output reaches the range limit in the other direction.

If Link mode is exited whilst Jog is selected, Jog continues to be active on the selected output.

Store and Recall

In Link mode a further 50 non-volatile memories are available which are quite separate from the 50 memories for each output in independent mode. The parameters stored are Range, Voltage, Current Limit, OVP and OCP. Operation in Link mode is exactly as described in the Store, Recall and Delete paragraphs of the Main Outputs section; the display messages described in these sections appear in both displays when Link mode is selected.

OVP, OCP and Sense

OVP, OCP and Sense can only be set when either channel is independently selected. The settings are maintained when Link mode is selected; OVP and OCP can be saved as part of a Link mode set-up but the Sense setting cannot. If an attempt is made to change OVP, OCP or Sense whilst in Link mode the display of Output 1 will flash **SELCt 1or2** to remind the user that these parameters must be set independently for each channel. Press ESCAPE to cancel the flashing display, assign control to the appropriate channel using the ◀ CONTROL ▶ 1 or 2 keys and set OVP, OCP, or Sense as described for the individual outputs.

Output Power

Pressing SHIFT, V x A causes the output power of both outputs to be displayed simultaneously in their respective displays (V x A in the voltage display, **UA** in the current display) exactly as described for independent operation.

Extra Functions

The # functions described in the Extra Functions paragraph of the Main Outputs section can also be set when the instrument is in Link mode; both displays will show **HASH No._** after pressing SHIFT, #. Any # function set in this way will of course be the same for both outputs. However, the # functions can be different for each output if they are separately set whilst in independent mode and the function selection will be maintained for each output even when the outputs are in Link mode.

Bus Type and Address/Baud Rate

The Bus Type, Address and Baud Rate can only be selected when control is assigned to Output 2. The Output 2 display is used to show the parameters being set, exactly as described for independent operation. If an attempt is made to set these parameters in LINK mode, or with Output 1 selected, the display of Output 1 flashes **SELCt P.U._2** as a prompt to select Output 2. Press Escape to clear the display prompt (or wait for it to time out), then select Output 2.

Main Outputs – Copy Function (T models only)

The principle settings of Output 1 can be copied to Output 2 using the Copy function, irrespective of the ◂ CONTROL ▸ mode (1, 2 or LINK) currently selected. The parameters copied are Range, Voltage, Current Limit, OVP and OCP; the status of Sense, ON/OFF, Jog and the Store contents are not copied.

Pressing SHIFT, COPY 1>2 causes the Voltage, Current and Range settings of Output 1 to appear on the displays of Output 2 in flashing mode; the OK key also flashes. Pressing OK confirms and implements the Copy operation; pressing ESCAPE at that point abandons the operation.

If the Copy operation will cause a range change to Output 2, and if Output 2 is ON, the Output 2 ON/OFF key also flashes and the output is turned OFF when OK is pressed; the output can also be turned off directly with its ON/OFF key before OK is pressed.

Auxiliary Output (T models only)

The AUX output can provide up to 3 Amp at an output voltage of 1.00V to 6.00V. The output voltage is set by the Jog control (only) with a fixed stepping resolution of 10mV; the current limit is fixed at ≥3A.

The AUX output voltage can be set, and the voltage and current monitored, on the Main Output 1 display with alternate presses of the SET/VIEW button beside the AUX terminals. Press once to show the AUX V & I (**A** shows in front of the V setting to indicate this), press again to show the V & I of Output 1.

The AUX output is switched on and off with the AUX ON/OFF key; the key is lit when AUX is on. With the AUX output off, and the AUX V & I shown on the display of Output 1, the AUX output voltage can be previewed and set using the Jog control; the current limit is fixed and the preview shows 3.00A. With the AUX output turned on, the Output 1 display shows actual AUX output voltage and current.

The AUX output is protected against current overload and momentary short-circuit as follows. When the load current exceeds ~3.00A the I_{LIMIT} lamp lights to show that regulation is no longer maintained. If this overload condition persists for more than approximately 5s the output will trip off; the AUX ON/OFF key is no longer lit, the I_{LIMIT} lamp now flashes, and the display of Output 1 (if set to show AUX V & I) shows the message **triP** in place of the current measurement. Pressing the AUX ON/OFF key then resets both the I_{LIMIT} lamp and the Output 1 display to show preset AUX voltage and current limit. Once the overload condition has been removed the AUX output can be switched on again.

A further 10 non-volatile memories, separate from the 50 memories for each Main output and Link mode operation, are available to store AUX output voltage set-ups. Press the SET/VIEW key to show AUX V & I in the display of Output 1; operation is then exactly as described in the Store, Recall and Delete paragraphs of the Main Outputs section.

The output terminals are duplicated on the rear panel (screwless terminals) for rack use; there is no remote sense capability.

The following features of the AUX output can be set/monitored via the remote interfaces:

Set output voltage; readback set output voltage.
Readback actual output voltage and current.
Set a deltaV increment; readback the set increment.
Increment/decrement the output voltage by deltaV.
Switch AUX output on and off.
Readback output on/off status.
Current limit and current trip status (via LSR2? command, see Status Model).

Further details can be found in the Remote Commands section.

The instrument can be remotely controlled via its RS232, USB, LAN or GPIB interfaces.

USB remote control operates in a similar way to RS232 but via the USB connector. Software supplied with the instrument sets up the controlling computer to treat the USB connection as a virtual COM port. Application software on the computer can then access the instrument via that COM port.

The LAN interface is designed to meet 1.4 LXI (Lan eXtensions for Instrumentation) Core 2011. Remote control using the LAN interface is possible using the TCP/IP Sockets protocol. The instrument also contains a basic Web server which provides information on the unit and allows it to be configured from a web browser. Simple command line control from the browser is also possible.

All interfaces are, by default, live at all times (a LXI requirement) but access to individual interfaces may be restricted using the configuration options on the web pages.

Interface Locking

All the remote interfaces are live at all times, to remove any need to select the active interface and to ensure that the LAN interface is always available (as demanded by the LXI standard). To reduce the risk of the instrument being inadvertently under the control of two interfaces at once a simple lock and release mechanism is provided in the instruction set. The lock is automatically released where it is possible to detect disconnection and when the local button is pressed. Access to the interfaces may also be restricted using the web pages.

Any interface may request to have exclusive control of the instrument by sending an “IFLOCK” command. The lock may only be released by sending an “IFUNLOCK” command from the interface instance that currently has the lock and may be queried from any interface by sending an “IFLOCK?” command. The reply to any of these commands will be “-1” if the lock is owned by another interface instance, “0” if the interface is free and “1” if the lock is owned by the requesting interface instance. Sending any command from an interface without control privileges that attempts to change the instrument status will set bit 4 of the Standard Event Status Register and put 200 into the Execution Error Register to indicate that there are not sufficient privileges for the required action.

Note: it is also possible to configure the privileges for a particular interface to either ‘read only’ or ‘no access’ from the Web page interface.

Address & Baud Rate Selection and Interface Status View

The instrument address capability is strictly required only by the GPIB interface. However, use can be made of the ADDRESS? command over any of the interfaces to easily identify which instrument is being controlled by a particular COM port (for RS232 or USB) or TCP socket (for LAN). Note that the LAN interface also has a separate ‘Identify’ function, accessible from the instrument’s web pages, that flashes the instrument’s display until the function is cancelled.

To access the interface address or Baud rate the ◂ CONTROL ▸ mode must first be set to 2 (i.e. Output 2 only selected). Press SHIFT, Addr/Baud to display the currently selected instrument bus address. Pressing Addr/Baud again displays the currently selected Baud rate and repeated presses alternate between the two.

To change the address scroll through the available addresses using the Jog control when the address is displayed. The address can be set between 1 and 31 inclusive. The address can also be set from the instrument’s web pages. To change the Baud rate scroll through the available rates (600 to 19200, factory default 9600) using the Jog control when the Baud rate is displayed.

Press OK to select the last displayed address and Baud rate or ESCAPE to retain the previous selections.

By default all interfaces are live at all times. It is however possible to configure the privileges for a particular interface to either “read only” or “no access” from the Web page interface. The status of the interface privileges may be viewed, but not changed, from the front panel.

To view the interface privileges the ◂ CONTROL ▸ mode must first be set to 2 (i.e. Output 2 only selected). Press SHIFT, Bus Type to first display the status of the GPIB interface. To view the privilege status of another interface, scroll through the interface list using the Jog control until the required interface is displayed. The status will be shown as either **`Full`**, **`oFF`** or **`rEAd`**.

Remote/Local Operation

At power-on the instrument will be in the local state with the REM indicator off. In this state all keyboard operations are possible. When the instrument is addressed to listen and a command is received the remote state will be entered and REM will be turned on. In this state the keyboard is locked out and remote commands only will be processed. The instrument may be returned to the local state by pressing the LOCAL key; however, the effect of this action will only remain until the instrument is addressed again or receives another character from the interface, when the remote state will once again be entered.

RS232 Interface

RS232 Interface Connector

The 9-way D-type serial interface connector is located on the instrument rear panel. The pin connections are as shown below:

Pin	Name	Description
1	RI	Passively asserted (+V through 10kΩ)
2	TXD	Transmitted data from instrument
3	RXD	Received data to instrument
4	CTS	
5	GND	Signal ground
6	RTS	Passively asserted (+V through 10kΩ)
7	DSR	No internal connection
8	DTR	
9	CD	No internal connection

RS232 Connections

The RS232 interface should be connected to a standard PC port using a fully wired 1:1 male-female cable without any cross-over connections. Alternatively, only pins 2, 3 and 5 need be connected to the PC, but with links made in the connector at the PC end between pins 1, 4 and 6 and between pins 7 and 8, see diagram.

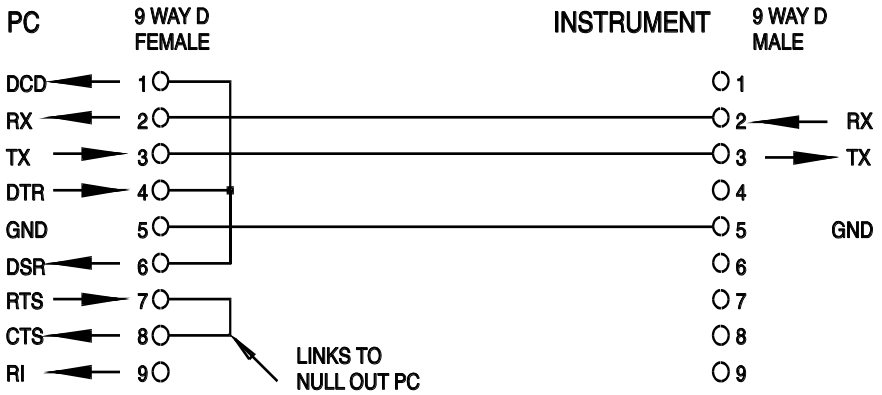

Baud Rate is set as described above in Address and Baud Rate Selection; the other parameters are fixed as follows:

Start Bits: 1	Parity: None
Data Bits: 8	Stop Bits: 1

RS232 Character Set

Because of the need for XON/XOFF handshake it is possible to send ASCII coded data only; binary blocks are not allowed. Bit 7 of ASCII codes is ignored, i.e. assumed to be low. No distinction is made between upper and lower case characters in command mnemonics and they may be freely mixed. In this manual 20H, etc. means 20 in hexadecimal

USB Interface

Using the USB interface for remote control requires a Communications Device Class driver on the PC to provide a virtual COM port instance. In Windows a suitable driver is provided by Microsoft, but it is not installed by default. The data (.INF) file to control the installation is available for download from the AIM-TTi support website (www.aimtti.com/support); however the same driver is also used by many other instruments from this manufacturer and may already be known to the PC.

To install the driver for the first time, first switch the unit on, and then connect the USB port to the PC. The Windows plug and play functions should automatically recognise the attachment of new hardware to the USB interface and (possibly after searching the internet for some time) prompt for the location of a suitable driver. Follow the Windows prompts and select the driver files downloaded from the AIM-TTi support website (www.aimtti.com/support). The file is named USB_ARM_VCP_xxx.INF, where xxx is a version number. (A readme.pdf file is also included in the downloaded driver package if further assistance is needed).

In some cases Windows will not complete this procedure (especially recent versions which search the internet first, looking for the unique Vendor ID and Product ID), in which case the instrument will show in Device Manager as “not working properly”. If this happens, select this device, right click and choose “update driver software...” and then “browse this computer for driver software...”. Then locate the .INF file within the driver package downloaded from the AIM-TTi support website (www.aimtti.com/support), as described above.

Once Windows has installed the device driver it will assign a COM port number to this particular unit. This number will depend on previous COM port assignments on this PC, and it may be necessary to use Device Manager to discover it. Each instrument has a unique USB identifier which is remembered by the system, so it will receive the same COM port number whenever it is attached to the same PC (regardless of the physical interface socket used), even though the COM port will disappear while the instrument is disconnected or switched off. Other instruments will receive different COM port numbers.

Note that a different PC will not necessarily assign the same COM port number to a particular instrument (it depends on the history of installations), however Device Manager can be used to change the assignments given.

This virtual COM port can be driven by Windows applications (including a terminal emulator) in exactly the same way as any standard COM port, except that the Baud rate and other settings are unnecessary and are ignored. Some old applications might not function with COM port numbers 3 or 4, or above 9. In this case, use Device Manager to change the allocation given. Once it is installed, the driver will be maintained by Windows Update in the usual way.

LAN Interface

The LAN interface is designed to comply with 1.4 LXI Core 2011 and contains the interfaces and protocols described below. Since it is possible to misconfigure the LAN interface, making it impossible to communicate with the instrument over LAN, a LAN Configuration Initialise (LCI) mechanism is provided via a recessed switch on the rear panel to reset the unit to the factory default. The default setting is for the instrument to attempt to obtain settings via DHCP if available or, if DHCP times out (30 seconds), via Auto-IP. In the very unlikely event that an Auto-

IP address cannot be found a static IP address of 192.168.0.100 is assigned. Resetting the LAN removes any password protection.

For more information on LXI standards refer to www.lxistandard.org/home .

LAN Connection

To use the LAN interface, the IP address of the unit must be known. The AIM-TTi support website (www.aimtti.com/support) includes a guide to the LXI Discovery Tool, providing links to the latest version of the tool and associated downloads. The tool is a Windows PC application which can be used to display the IP addresses or host names of all connected devices that comply with the VXI-11 protocol or support multicast Domain Name System (mDNS) records. Connecting via a router is recommended as this is significantly quicker to assign an IP address; connecting directly to the PC will begin to assign an IP address only after a 30 second DHCP timeout. Double clicking on any entry in the list of devices discovered will open the PC's web browser and display the Home page of that device.

There are also tools for LAN discovery included as part of the National Instruments Measurement and Automation Explorer package and the Agilent Vee application.

The unit will, when first powered up, attempt to obtain settings via DHCP if available or, if DHCP times out (30 seconds), via Auto-IP. In the very unlikely event that an Auto-IP address cannot be found a static IP address of 192.168.0.100 is assigned. During this time the LAN lamp will be lit and it will stay lit if a LAN connection is successfully made. However, if a connection is still not made by the end of the above process, or if the LAN connector is physically removed at any time, the LAN lamp will go off; see LAN Error section for details.

Web Server; Configuration Password Protection

The unit contains a basic web server. This provides information on the instrument and allows it to be configured. The Configure page can be password protected to deter unauthorised changes to the remote operation configuration; the default configuration is ‘no password’.

The Configure page itself explains how to set the password. The password can be up to 15 characters long; note that the **User Name should be left blank**. The password will, however, be reset to the default (no password) if the rear panel LAN RESET switch is used to reset all the LAN parameters to their factory default.

The web pages also have an ‘Identify’ function which allows the user to send an identifying command to the instrument which causes its displays to flash until the command is cancelled.

ICMP Ping Server

The unit contains an ICMP server allowing the instrument to be ‘pinged’ via either its host name or IP address.

VXI-11 Discovery Protocol

The instrument has very limited support of VXI-11 which is sufficient for the discovery protocol and no more.

The instrument implements a Sun RPC Port-mapper on TCP port 111 and UDP port 111 as defined in RPC1183. The calls supported are: NULL, GET PORT and DUMP.

On TCP port 1024 a very simple VXI-11 protocol is implemented sufficient only for instrument discovery. This implements the following calls: CREATE LINK, DEVICE_WRITE, DEVICE_READ and DESTROY_LINK.

Once a link has been created anything written to the device is ignored and any read from the device returns the identification string as would be expected from a “*IDN?” of the form

‘Manufacturer,Model,Serial No.,X.xx – Y.yy’

for example

THURLBY THANDAR, QL355TP, 279730, 1.00 – 1.00

where ‘X.xx’ is the revision of the main firmware and ‘Y.yy’ is the revision of the interface firmware. Interface firmware is user field updateable via the USB port.

mDNS and DNS-SD Support

Multicast DNS provides DNS services even on networks without a central DNS server (or DHCP server). This simplifies the setting up of a simple LAN using meaningful hostnames instead of a

raw IP address. With service discovery it becomes straightforward for the device to be discovered and the services it provides.
The services provided by the instrument are http (_http._tcp) and lxi (_lxi._tcp).

VISA Resource Name

Because of the limited support for VXI-11(Discovery Protocol only), the instrument must be referred to by its raw socket information when used in software packages which communicate via a VISA resource name. For example, an instrument at IP address 192.168.1.100 would normally have a VISA resource name of "TCPIP0::192.168.1.100::inst0::INSTR" but for this instrument the name must be modified to read "TCPIP0::192.168.1.100::9221::SOCKET" where 9221 is the TCP port used by this instrument for control and monitoring, see below.

XML Identification Document URL

As required by the LXI Standard, the instrument provides an XML identification document that can be queried via a GET at “http://<hostname>:80/lxi/identification” that conforms to the LXI XSD Schema (available at http://www.lxistandard.org/InstrumentIdentification/1.0) and the W3C XML Schema Standards (http://www.w3.org/XML/Schema). This document describes the instrument.

TCP Sockets

The instrument uses 2 sockets on TCP port 9221 for instrument control and monitoring. Text commands are sent to this port as defined in ‘Remote Commands’ and any replies are returned via the same port. Any string must be one or more complete commands. Commands may be separated with either semicolons “;” or line feeds. No terminator is required since the TCP frame contains complete commands though commands may be sent with a terminator if desired (it will be ignored). Each command over TCP behaves as if it is terminated with a command terminator (ASCII character 0AH, line feed).

LAN Error

If a LAN connection is made but an error is detected (e.g. the IP address is the same as another device on the network) then the instrument’s LAN lamp (above the Output 2 meters) will be off until the error is corrected. If a LAN error occurs; check and correct the configuration of the instrument; a LAN Configuration Initialise (LCI) mechanism is provided via a recessed switch on the rear panel (marked LAN RESET) to reset the unit to the factory default. The default setting is for the instrument to attempt to obtain settings via DHCP if available or, if DHCP times out (30 seconds), via Auto-IP. In the very unlikely event that an Auto-IP address cannot be found a static IP address of 192.168.0.100 is assigned.
If no physical LAN connection is found at any time the LAN lamp will be off.

GPIB Interface (G models only)

The GPIB interface 24-way connector is located on the instrument rear panel. The pin connections are as specified in IEEE Std. 488.1-1987 and the instrument complies with IEEE Std. 488.1-1987 and IEEE Std. 488.2-1987.

GPIB Subsets

This instrument contains the following IEEE 488.1 subsets:

Source Handshake	SH1
Acceptor Handshake	AH1
Talker	T6
Listener	L4
Service Request	SR1
Remote Local	RL1
Parallel Poll	PP1
Device Clear	DC1
Device Trigger	DT0
Controller	C0

GPIB IEEE Std. 488.2 Error Handling – Query Error Register

The IEEE 488.2 UNTERMINATED error (addressed to talk with nothing to say) is handled as follows. If the instrument is addressed to talk and the response formatter is inactive and the input queue is empty then the UNTERMINATED error is generated. This will cause the Query Error bit to be set in the Standard Event Status Register, a value of 3 to be placed in the Query Error Register and the parser to be reset. See the Status Reporting section for further information.

The IEEE 488.2 INTERRUPTED error is handled as follows. If the response formatter is waiting to send a response message and a <PROGRAM MESSAGE TERMINATOR> has been read by the parser or the input queue contains more than one END message then the instrument has been INTERRUPTED and an error is generated. This will cause the Query Error bit to be set in the Standard Event Status Register, a value of 1 to be placed in the Query Error Register and the response formatter to be reset thus clearing the output queue. The parser will then start parsing the next <PROGRAM MESSAGE UNIT> from the input queue. See the Status Reporting section for further information.

The IEEE 488.2 DEADLOCK error is handled as follows. If the response formatter is waiting to send a response message and the input queue becomes full then the instrument enters the DEADLOCK state and an error is generated. This will cause the Query Error bit to be set in the Standard Event Status Register, a value of 2 to be placed in the Query Error Register and the response formatter to be reset thus clearing the output queue. The parser will then start parsing the next <PROGRAM MESSAGE UNIT> from the input queue. See the Status Reporting section for further information.

GPIB Parallel Poll

Complete parallel poll capabilities are offered on this instrument. The Parallel Poll Enable Register is set to specify which bits in the Status Byte Register are to be used to form the ist local message The Parallel Poll Enable Register is set by the *PRE <NRF> command and read by the *PRE? command. The value in the Parallel Poll Enable Register is ANDed with the Status Byte Register; if the result is zero then the value of ist is 0 otherwise the value of ist is 1.

The instrument must also be configured so that the value of ist can be returned to the controller during a parallel poll operation. The instrument is configured by the controller sending a Parallel Poll Configure command (PPC) followed by a Parallel Poll Enable command (PPE). The bits in the PPE command are shown below:

bit 7 =	X	don't care
bit 6 =	1	Parallel poll enable
bit 5 =	1	
bit 4 =	0	
bit 3 =	Sense	sense of the response bit; 0 = low, 1 = high
bit 2 =	?	bit position of the response
bit 1 =	?	
bit 0 =	?	

To return the RQS bit (bit 6 of the Status Byte Register) as a 1 when true and a 0 when false in bit position 1 in response to a parallel poll operation send the following commands

*PRE 64<pmt>, then PPC followed by 69H (PPE)

The parallel poll response from the instrument will then be 00H if RQS is 0 and 01H if RQS is 1.

During parallel poll response the DIO interface lines are resistively terminated (passive termination). This allows multiple devices to share the same response bit position in either wired-AND or wired-OR configuration, see IEEE 488.1 for more information.

Status Reporting

This section describes the complete status model of the instrument. Note that some registers are specific to the GPIB section of the instrument and are of limited use in an RS232 environment.

Standard Event Status and Standard Event Status Enable Registers

These two registers are implemented as required by the IEEE Std. 488.2.
Any bits set in the Standard Event Status Register which correspond to bits set in the Standard Event Status Enable Register will cause the ESB bit to be set in the Status Byte Register.

The Standard Event Status Register is read and cleared by the *ESR? command. The Standard Event Status Enable register is set by the *ESE <NRF> command and read by the *ESE? command.

Bit 7 - Power On. Set when power is first applied to the instrument.

Bit 6 - Not used.

Bit 5 - Command Error. Set when a syntax type error is detected in a command from the bus. The parser is reset and parsing continues at the next byte in the input stream.

Bit 4 - Execution Error. Set when an error is encountered while attempting to execute a completely parsed command. The appropriate error number will be reported in the Execution Error Register.

- 1- 99 Indicates a hardware error has been encountered.
- 116 A recall of set up data has been requested but the store specified does not contain any data.
- 117 A recall of set up data has been requested but the store specified contains corrupted data. This indicates either a hardware fault or a temporary data corruption which can be corrected by writing data to the store again.
- 120 The numerical value sent with the command was too big or too small. Includes negative numbers where only positive numbers are accepted.
- 123 A recall/store of set up data has been requested from/to an illegal store number.
- 124 A range change has been requested but the current psu settings make it illegal – see Manual Operation instructions for details.
- 200 Read Only: An attempt has been made to change the settings of the instrument from an interface without write privileges, see the Interface Locking section.

Bit 3 - Verify Timeout Error. Set when a parameter is set with 'verify' specified and the value is not reached within 5 secs, e.g. output voltage is slowed by a large capacitor on the output.

Bit 2 - Query Error. Set when a query error occurs. The appropriate error number will be reported in the Query Error Register as listed below.

1. Interrupted error
2. Deadlock error
3. Unterminated error

Bit 1 - Not used.

Bit 0 - Operation Complete. Set in response to the *OPC command.

Limit Event Status Registers and Limit Event Status Enable Registers

Two pairs of registers are implemented as an addition to the IEEE Std.488.2. Each pair consists of a Limit Event Status Register and an accompanying Limit Status Event Enable Register. Limit Event Status Register 1 (LSR1) and Limit Event Status Enable Register 1 (LSE1) apply to output 1. Limit Event Status Register 2 (LSR2) and Limit Event Status Enable Register 2 (LSE2) apply to output 2 and the Auxiliary output. Their purpose is to inform the controller of entry to and/or exit from current or voltage limit conditions by storing a history of protection trip conditions since the last read.

Any bits set in a Limit Event Status Register which correspond to bits set in the accompanying Limit Event Status Enable Register will cause the LIM1 or LIM2 bit to be set in the Status Byte Register.

Limit Event Status Registers 1 and 2 are read and cleared by the LSR1? and LSR2? commands respectively. Limit Event Status Enable Registers 1 and 2 are set by the LSE1<NRF> and LSE2<NRF> commands and read by the LSE1? and LSE2? commands respectively.

Limit Event Status Register 1

Bit 7 - not used

Bit 6 - not used

Bit 5 - Set when an output 1 sense trip has occurred

Bit 4 - Set when an output 1 thermal trip has occurred

Bit 3 - Set when an output 1 over current trip has occurred

Bit 2 - Set when an output 1 over voltage trip has occurred

Bit 1 - Set when output 1 enters current limit (constant current mode)

Bit 0 - Set when output 1 enters voltage limit (constant voltage mode)

Limit Event Status Register 2

Bit 7 - Set when the Auxiliary output trip has occurred

Bit 6 - Set when the Auxiliary output enters current limit

Bit 5 - Set when an output 2 sense trip has occurred

Bit 4 - Set when an output 2 thermal trip has occurred

Bit 3 - Set when an output 2 over current trip has occurred

Bit 2 - Set when an output 2 over voltage trip has occurred

Bit 1 - Set when output 2 enters current limit (constant current mode)

Bit 0 - Set when output 2 enters voltage limit (constant voltage mode)

Status Byte Register and Service Request Enable Register

These two registers are implemented as required by the IEEE Std. 488.2.
Any bits set in the Status Byte Register which correspond to bits set in the Service Request Enable Register will cause the RQS/MSS bit to be set in the Status Byte Register, thus generating a Service Request on the bus.

The Status Byte Register is read either by the *STB? command, which will return MSS in bit 6, or by a Serial Poll which will return RQS in bit 6. The Service Request Enable register is set by the *SRE <NRF> command and read by the *SRE? command.

Bit 7 - Not used.

Bit 6 - RQS/MSS. This bit, as defined by IEEE Std. 488.2, contains both the Requesting Service message and the Master Status Summary message. RQS is returned in response to a Serial Poll and MSS is returned in response to the *STB? command.

Bit 5 - ESB. The Event Status Bit. This bit is set if any bits set in the Standard Event Status Register correspond to bits set in the Standard Event Status Enable Register.

Bit 4 - MAV. The Message Available Bit. This will be set when the instrument has a response message formatted and ready to send to the controller. The bit will be cleared after the Response Message Terminator has been sent.

Bit 3 - Not used.

Bit 2 - Not used.

Bit 1 - LIM2. This will be set if any bits in Limit Event Status Register 2 are set and corresponding bits are set in Limit Event Status Enable Register 2.

Bit 0 - LIM1. This will be set if any bits in Limit Event Status Register 1 are set and corresponding bits are set in Limit Event Status Enable Register 1.

Status Model
(For single output models ignore LSR2, LSE2 & LIM2)

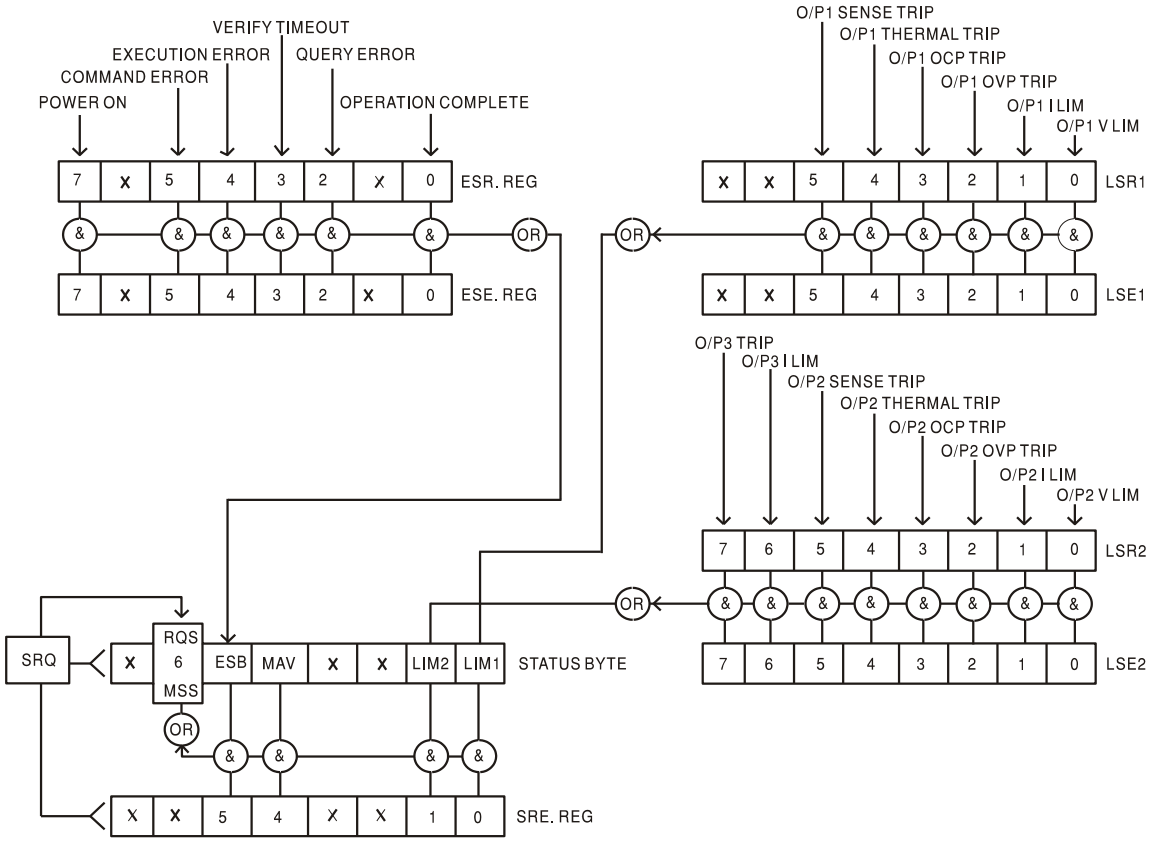

Power on Settings

The following instrument status values are set at power on:

Status Byte Register	= 0
Service Request Enable Register †	= 0
Standard Event Status Register	= 128 (pon bit set)
Standard Event Status Enable Register †	= 0
Execution Error Register	= 0
Query Error Register	= 0
Parallel Poll Enable Register †	= 0

† Registers marked thus are specific to the GPIB section of the instrument and are of limited use via other interfaces.

The instrument will be in local state with the keyboard active.

The instrument parameters at power on are the same as at last switch off with the exception of the output status. By default this is always off at power on but the user may change this to the same at power on as at switch off.

The *RST (reset) command resets the instrument to the Remote Operation Default settings.

Remote Operation Default settings are:

V_{out}=1V, I_{out}=1A, DeltaV=0mV, DeltaI=0mA for all models.
OVP = 40V & OCP = 5.5A for QL355 models; OVP = 60V & OCP = 4.4A for QL564 models.

Remote interface settings and Output state at power-on setting are unchanged by *RST.
Remote sense is set to local operation.

RS232/USB Remote Command Format

Serial input to the instrument is buffered in a 256 byte input queue which is filled, under interrupt, in a manner transparent to all other instrument operations. The instrument will send XOFF when approximately 200 characters are in the queue. XON will be sent when approximately 100 free spaces become available in the queue after XOFF was sent. This queue contains raw (un-parsed) data which is taken, by the parser, as required. Commands (and queries) are executed in order and the parser will not start a new command until any previous command or query is complete. In RS232 mode responses to commands or queries are sent immediately; there is no output queue.

USB input conforms with USB 2.0 Full Speed.

LAN input to the instrument is buffered in a 1500 byte input queue which is filled, under interrupt, in a manner transparent to all other instrument operations. LAN interface conforms with 1.4 LXI (LAN eXtensions for Instrumentation) Core 2011.

Commands must be sent as specified in the commands list and must be terminated with the command terminator code 0AH (Line Feed, LF). Commands may be sent in groups with individual commands separated from each other by the code 3BH (;). The group must be terminated with command terminator 0AH (Line Feed, LF).

Responses from the instrument to the controller are sent as specified in the commands list. Each response is terminated by 0DH (Carriage Return, CR) followed by 0AH (Line Feed, LF).

<WHITE SPACE> is defined as character codes 00H to 20H inclusive.

<WHITE SPACE> is ignored except in command identifiers. e.g. '*C LS' is not equivalent to '*CLS'.

The high bit of all characters is ignored.

The commands are case insensitive.

GPIB Remote Command Formats (G models only)

GPIB input to the instrument is buffered in a 256 byte input queue which is filled, under interrupt, in a manner transparent to all other instrument operations. The queue contains raw (un-parsed) data which is taken, by the parser, as required. Commands (and queries) are executed in order and the parser will not start a new command until any previous command or query is complete. There is no output queue which means that the response formatter will wait, indefinitely if necessary, until the instrument is addressed to talk and the complete response message has been sent, before the parser is allowed to start the next command in the input queue.

Commands are sent as <PROGRAM MESSAGES> by the controller, each message consisting of zero or more <PROGRAM MESSAGE UNIT> elements separated by <PROGRAM MESSAGE UNIT SEPARATOR> elements.

A <PROGRAM MESSAGE UNIT> is any of the commands in the remote commands list.

A <PROGRAM MESSAGE UNIT SEPARATOR> is the semi-colon character ';' (3BH).

<PROGRAM MESSAGES> are separated by <PROGRAM MESSAGE TERMINATOR> elements which may be any of the following:

NL	The new line character (0AH)
NL^END	The new line character with the END message
^END	The END message with the last character of the message

Responses from the instrument to the controller are sent as <RESPONSE MESSAGES>. A <RESPONSE MESSAGE> consists of one <RESPONSE MESSAGE UNIT> followed by a <RESPONSE MESSAGE TERMINATOR>.

A <RESPONSE MESSAGE TERMINATOR> is the new line character with the END message NL^END.

Each query produces a specific <RESPONSE MESSAGE> which is listed along with the command in the remote commands list.

<WHITE SPACE> is ignored except in command identifiers. e.g. '*C LS' is not equivalent to '*CLS'. <WHITE SPACE> is defined as character codes 00H to 20H inclusive with the exception of the NL character (0AH).

The high bit of all characters is ignored.

The commands are case insensitive.

Command List

This section lists all commands and queries implemented in this instrument. The commands are listed in alphabetical order within the function groups.

Note that there are no dependent parameters, coupled parameters, overlapping commands, expression program data elements or compound command program headers; each command is completely executed before the next command is started. All commands are sequential and the operation complete message is generated immediately after execution in all cases.

The following nomenclature is used:

<RMT>	<RESPONSE MESSAGE TERMINATOR>
<NRF>	A number in any format. e.g. 12, 12·00, 1·2 e1 and 120 e-1 are all accepted as the number 12. Any number, when received, is converted to the required precision consistent with the use then rounded up to obtain the value of the command.
<NR1>	A number with no fractional part, i.e. an integer.
<NR2>	A number in fixed point format e.g. 11·52, 0·78 etc.
<N>	The number of the output or status register to which the command relates. Note that on single output supplies <N>=1 always. Note also that <N>= 3 refers to the AUX output. The AUX output has limited remote control functionality. For clarity, the commands where <N>= 3 can be used are explicitly commented; elsewhere only <N>= 1 or <N>= 2 can be used.
<CPD>	<CHARACTER PROGRAM DATA>
<CRD>	<CHARACTER RESPONSE DATA>

The commands which begin with a ***** are those specified by IEEE Std. 488.2 as Common commands. All will function when used on the other interfaces but some are of little use.

Instrument Specific Commands

For commands specified as 'WITH VERIFY' the operation is completed when the parameter being adjusted reaches the required value to within ±5% or ±10 counts, whichever is the greater. If the value fails to settle within these limits within 5 seconds then the Verify Timeout bit (bit 3) is set in the Standard Event Status Register and the operation is completed at the end of the timeout period.

The Operation Complete bit (bit 0) in the Standard Event Status Register is only ever set by the *OPC command. The *OPC (or the *OPC?) command can be used for device synchronisation due to the sequential nature of remote operations.

When the supply is operated in LINK mode, commands which set values and ranges are applied to outputs 1 and 2 simultaneously, regardless of the whether <N> is set to 1 or 2. When the command requests verification then verification will be sought from both outputs before the command is completed. Additionally the SAV<N> and RCL<N> commands operate on non-volatile memory reserved for linked mode set-ups and <N> may be set to 1 or 2 with the same effect. Note however that <N> is part of the command header and must be included.

V<N> <NRF>	Set output <N> to <NRF> Volts. For AUX output <N>=3
V<N>V <NRF>	Set output <N> to <NRF> Volts with verify. For AUX output <N>=3

OVP<N> <NRF>	Set output <N> over voltage protection trip point to <NRF> Volts
I<N> <NRF>	Set output <N> current limit to <NRF> Amps
OCP<N> <NRF>	Set output <N> over current protection trip point to <NRF> Amps
V<N>?	Return the set voltage of output <N> . For AUX output <N>=3 – response is V <N> <NR2><RMT> where <NR2> is in Volts
I<N>?	Return the set current limit of output <N> – response is I <N> <NR2><RMT> where <NR2> is in Amps
OVP<N>?	Return the voltage trip setting for output <N> – response is VP<N> <NR2><RMT> where <NR2> is in Volts
OCP<N>?	Return the current trip setting for output <N> – response is IP<N> <NR2><RMT> where <NR2> is in Amps
V<N>O?	Return the output readback voltage for output <N>. For AUX output <N>=3 – response is <NR2>V<RMT> where <NR2> is in Volts
I<N>O?	Return the output readback current for output <N>. For AUX output <N>=3 – response is <NR2>A<RMT> where <NR2> is in Amps
RANGE<N> <NRF>	Set the voltage range of output <N> to <NRF> where <NRF> has the following meaning: **QL355 Models:** 0=15V(5A), 1=35V(3A), 2=35V(500mA) **QL564 Models:** 0=25V(4A), 1=56V(2A), 2=56V(500mA)
RANGE<N>?	Return the set voltage range of output <N> – response is R<N> <NR1><RMT> where <NR1> has the following meaning: **QL355 Models:** 0=15V(5A), 1=35V(3A), 2=35V(500mA) **QL564 Models:** 0=25V(4A), 1=56V(2A), 2=56V(500mA)
DELTAV<N> <NRF>	Set the output <N> voltage step size to <NRF> Volts. For AUX output <N>=3
DELTAI<N> <NRF>	Set the output <N> current step size to <NRF> Amps
DELTAV<N>?	Return the output <N> voltage step size. For AUX output <N>=3 – response is DELTAV<N> <NR2><RMT> where <NR2> is in Volts.
DELTAI<N>?	Return the output <N> current step size – response is DELTAI<N> <NR2><RMT> where <NR2> is in Amps.
INCV<N>	Increment the output <N> voltage by the step size set for output <N>. For AUX output <N>=3
INCV<N>V	Increment with verify the output <N> voltage by the step size set for output <N>. For AUX output <N>=3
DECV<N>	Decrement the output <N> voltage by the step size set for output <N>. For AUX output <N>=3
DECV<N>V	Decrement with verify the output <N> voltage by the step size set for output <N>. For AUX output <N>=3
INCI<N>	Increment the output <N> current limit by the step size set for output <N>
DECI<N>	Decrement the output <N> current limit by the step size set for output <N>
OP<N> <NRF>	Set output <N> on/off where <NRF> has the following meaning: 0=OFF, 1=ON For AUX output <N>=3
OP<N>?	Returns output <N> on/off status. For AUX output <N>=3 The response is <NR1><RMT> where 1 = ON, 0 = OFF.

OPALL <NRF>	Simultaneously sets all outputs on/off where <NRF> has the following meaning: 0=All OFF, 1=ALL ON. If OPALL sets all outputs ON then any that were already on will remain ON. If OPALL sets all outputs OFF then any that were already off will remain OFF
SENSE<N> <NRF>	Set the output <N> sense mode where <NRF> has the following meaning: 0=local, 1=remote
MODE <NRF>	Set the instrument operating mode to LINK or assign control to output 1 or 2 <NRF> has the following meaning: 0 = linked, 1 = assign control to output 1, 2 = assign control to output 2. Setting linked mode uniquely affects the way the instrument responds to some remote commands. Commands to set Range, Voltage, Current Limit, OVP or OCP sent to either Output 1 or Output 2 will change the setting on both outputs simultaneously. Similarly, increment/decrement commands sent to either Main output will step V or I on both outputs; however, the step size will be that set for the individual output. Assigning control to outputs 1 or 2 exits linked mode but has no other affect until the instrument is returned to local operation. Any operating mode set in remote operation will be retained when the instrument is returned to local operation.
MODE?	Return the current operating mode – response is LINKED or CTRL<N> (control assigned to output <N>)
TRIPRST	Attempt to clear all trip conditions from all outputs
LSR<N>?	Query and clear LSR<N>, limit status register <N> – response is <NR1><RMT>
LSE<N> <NRF>	Set the value of LSE<N>, limit status enable register <N>, to <NRF>
LSE<N>?	Return the value of LSE<N>, limit status enable register <N> – response is <NR1><RMT>
SAV<N> <NRF>	Save the current set-up of output <N> to the set-up store specified by <NRF> where <NRF> can be 0-49 for the main outputs or 0-9 for the AUX output on TP models. For AUX output <N>=3. If the instrument is operating in linked mode then the entire instrument set-up (excluding auxiliary output) will be stored in the linked mode set-up store specified by <NRF>. The <N> specification is ignored. This has no affect on the individual PSU<N> set-up stores available when not in linked mode
RCL<N> <NRF>	Recall a set up for output <N> from the set-up store specified by <NRF> where <NRF> can be 0-49 for the main outputs or 0-9 for the AUX output on TP models. For AUX output <N>=3. If the instrument is operating in LINK mode then the entire instrument set-up (excluding AUX output) will be recalled from the LINK mode set-up store specified by <NRF>. The <N> specification is ignored.

System and Status Commands

*RST	Resets the instrument to the factory default settings – (see Factory Defaults section) with the exception of all remote interface settings.
EER?	Query and clear Execution Error Register. The response format is nr1<RMT>.
QER?	Query and clear Query Error Register. The response format is nr1<RMT>
*CLS	Clear Status. Clears the Standard Event Status Register, Query Error Register and Execution Error Register. This indirectly clears the Status Byte Register.

*ESE <NRF>	Set the Standard Event Status Enable Register to the value of <NRF>.
*ESE?	Returns the value in the Standard Event Status Enable Register in <NR1> numeric format. The syntax of the response is <NR1><RMT>
*ESR?	Returns the value in the Standard Event Status Register in <NR1> numeric format. The register is then cleared. The syntax of the response is <NR1><RMT>
*IST?	Returns **ist** local message as defined by IEEE Std. 488.2. The syntax of the response is 0<RMT>, if the local message is false, or 1<RMT>, if the local message is true.
*OPC	Sets the Operation Complete bit (bit 0) in the Standard Event Status Register. This will happen immediately the command is executed because of the sequential nature of all operations.
*OPC?	Query Operation Complete status. The syntax of the response is 1<RMT>. The response will be available immediately the command is executed because of the sequential nature of all operations.
*PRE <NRF>	Set the Parallel Poll Enable Register to the value <NRF>.
*PRE?	Returns the value in the Parallel Poll Enable Register in <NR1> numeric format. The syntax of the response is <NR1><RMT>
*SRE <NRF>	Set the Service Request Enable Register to <NRF>.
*SRE?	Returns the value of the Service Request Enable Register in <NR1> numeric format. The syntax of the response is<NR1><RMT>
*STB?	Returns the value of the Status Byte Register in <NR1> numeric format. The syntax of the response is<NR1><RMT>
*WAI	Wait for Operation Complete true. As all commands are completely executed before the next is started this command takes no additional action.

Interface Management Commands

IFLOCK	Request Instrument 'lock'. This command requests exclusive access control of the instrument. The response is '1' is successful or '-1' if the lock is un-available either because it is already in use or the user has disabled this interface from taking control using the web interface
IFLOCK?	Query the status of the interface 'lock'. The return value is '1' if the lock is owned by the requesting interface instance; '0' if there is no active lock or '-1' if the lock is unavailable either because it is in use by another interface or the user has disabled the interface from taking control via the web interface.
IFUNLOCK	Release the 'lock' if possible. Returns '0' if successful. If this command is unsuccessful '-1' is returned, 200 is placed in the Execution Error Register and bit 4 of the Event Status Register is set indicating that you do not have the authority to release the lock.
LOCAL	Go to local. This does not release any active interface lock so that the lock remains with the selected interface when the next remote command is received.
ADDRESS?	Returns the bus address <NR1><RMT>. This number can be used to identify the unit
IPADDR?	Returns the present IP address of the LAN interface, provided it is connected. If it is not connected, the response will be the static IP if configured to always use that static IP, otherwise it will be 0.0.0.0 if waiting for DHCP or Auto-IP. The response is nnn.nnn.nnn.nnn<RMT>, where each nnn is 0 to 255.
NETMASK?	Returns the present netmask of the LAN interface, provided it is connected. The response is nnn.nnn.nnn.nnn<RMT>, where each nnn is 0 to 255.

NETCONFIG?	Returns the first means by which an IP address will be sought. The response is <CRD><RMT> where <CRD> is DHCP, AUTO or STATIC.

The following commands specify the parameters to be used by the LAN interface. **Note:** a power cycle is required after these commands are sent before the new settings are used (or returned in response to the queries listed above). The instrument does not attempt to check the validity of the IP address or netmask in any way other than checking that each part fits in 8 bits. The rear panel LAN RESET switch will override these commands and restore the defaults as described earlier.

NETCONFIG <CPD>	Specifies the means by which an IP address will be sought. <CPD> must be one of DHCP, AUTO or STATIC.
IPADDR <quad>	Sets the potential static IP address of the LAN interface (as on the webpage). The parameter must be strictly a dotted quad for the IP address, with each address part an <NR1> in the range 0 to 255, (e.g. 192.168.1.101).
NETMASK <quad>	Sets the netmask to accompany the static IP address of the LAN interface. The parameter must be strictly a dotted quad for the netmask, with each part an <NR1> in the range 0 to 255, (e.g. 255.255.255.0).

Miscellaneous Commands

*IDN?	Returns the instrument identification. The exact response is determined by the instrument configuration and is of the form <NAME>,<model>, 0, <version><RMT> where <NAME> is the manufacturer's name, <model> defines the type of instrument and <version> is the revision level of the software installed.
*TST?	The PSU has no self test capability and the response is always 0 <RMT>
*TRG	The PSU has no trigger capability.

Error Messages

Each error message has a number; only this number is reported via the remote control interfaces. Error message numbers are not displayed but are placed in the Execution Error Register where they can be read via the remote interfaces, see Status Reporting section.

Calibration Specific Commands

See Service Guide for details of calibration specific commands.

The Manufacturers or their agents overseas will provide a repair service for any unit developing a fault. Where owners wish to undertake their own maintenance work, this should only be done by skilled personnel in conjunction with the Service Guide which may be purchased directly from the Manufacturers or their agents overseas.

Cleaning

If the instrument requires cleaning use a cloth that is only lightly dampened with water or a mild detergent.

WARNING! TO AVOID ELECTRIC SHOCK, OR DAMAGE TO THE INSTRUMENT, NEVER ALLOW WATER TO GET INSIDE THE CASE. TO AVOID DAMAGE TO THE CASE NEVER CLEAN WITH SOLVENTS.

EXCELLENCE THROUGH EXPERIENCE

Aim-TTi is the trading name of Thurlby Thandar Instruments Ltd. (TTi), one of Europe's leading manufacturers of test and measurement instruments.

The company has wide experience in the design and manufacture of advanced test instruments and power supplies built up over more than thirty years.

The company is based in the United Kingdom, and all products are built at the main facility in Huntingdon, close to the famous university city of Cambridge

TRACEABLE QUALITY SYSTEMS

TTi is an ISO9001 registered company operating fully traceable quality systems for all processes from design through to final calibration

ISO9001:2015
Certificate number FM 20695

WHERE TO BUY AIM-TTI PRODUCTS

Aim-TTi products are widely available from a network of distributors and agents in more than sixty countries across the world.

To find your local distributor, please visit our website which provides full contact details

Designed and built in Europe by:

Thurlby Thandar Instruments Ltd.
Glebe Road, Huntingdon, Cambridgeshire.
PE29 7DR United Kingdom
Tel: +44 (0)1480 412451
Email: sales@aimtti.com
Web: www.aimtti.com

48511-1560 Issue 9