INSTRUCTION MANUAL

EN

LD400 & LD400P

Electronic DC Load, 80V, 80A, 400W
with/without Remote Interfaces

Troubleshooting

If the instrument does not seem to be operating as expected, check the following before suspecting a fault.

1. Check the position of the EXT – INT remote voltage sense switch on the rear panel.
2. Check that the voltage drop across the interconnecting cables between source and load is not excessive, especially if remote sensing is being used. The actual voltage at the input terminals of the load must meet the minimum operating voltage requirement for the current level expected. Use a DVM to measure the actual voltage at the terminals.
3. If using a mode other than Constant Current (especially Constant Power or Voltage) consult the 'Application Notes' chapter of this manual for guidance, especially concerning start-up conditions and stability considerations.
4. If the Input trips as soon as it is enabled, this is often an indication of instability.
5. If the Dropout facility is not required, check that the Dropout Voltage is set to zero.
6. Enter the ***Utilities*** menu, perform ***Restore Factory Defaults*** and re-configure from scratch.
7. Read the whole of this manual carefully, as operation of the load, and its interactions with the source, can be quite complex.

If the instrument appears to be reading an incorrect voltage or tripping unexpectedly, please check that the 'Voltage Sense Select' switch ① has not accidentally been set to external before returning the instrument as faulty. If External sense is not required, the switch must be set to Internal. For more details on External sense, see External Voltage Sense Input**.**

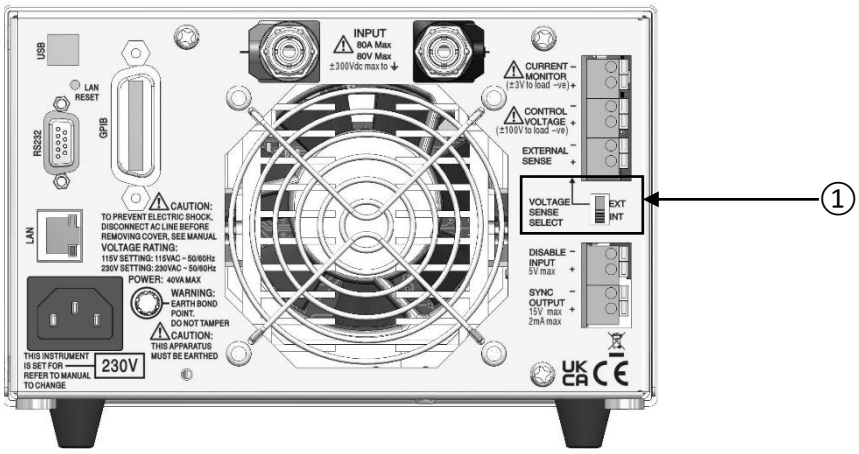

Table of Contents

Common return fault 1
41BTroubleshooting 2
0BSpecification 6
1BSafety 11
2BInstallation 12
3BConnections 13
4BInitial Operation 15
12BOrganisation of this manual 15
13BConnecting the Load to the Source 17
14BSwitching On 17
5BFront Panel Operation 18
15BKeys and Δ Adjust 18
16BThe Display and the Home Screen 18
17BGeneral Numeric Entry of Parameters 20
18BVariation of Parameter Values using Δ Adjust 20
19BConfiguring the Load 20
20BSelection of Load Mode 21
21BLevel A and Level B Setting and Range Selection 21
22BDropout Voltage 21
23BSlow Start 22
24BIntroduction to Transient Operation 22
25BTransient Menu 23
26BBattery Test Feature 25
27BVoltage and Current Limits 26
28BShort Term or Intermittent Operation at up to 600 Watts 26
29BStore and Recall Facilities 27
30BUtilities Menu 28
6BAnalogue Remote Control 29
7BApplication Notes 30
31BStability of Source and Load Combinations 31
32BDynamic Behaviour in Transient Operation 31
33BStart-up transients 32
34BCharacteristics of each Operating Mode 32
35BMultiple Unit Operation 35
36BZero Volt Operation 35
8BRemote Interface Configuration 36
37BGPIB Interface (optional) 36
38BRS232 Interface 36
39BUSB Interface and Device Driver Installation 37
40BLAN Interface 37

9BStatus Reporting 40

10BRemote Commands 45

11BMaintenance 51

41BTroubleshooting 51

User manuals, technical specifications, additional support and service information can be found at:http://www.aimtti.com/support.This manual is 48511-1730 Issue 8.

Français

Sécurité 52

Vous trouverez les manuels de l'utilisateur, les spécifications techniques, tout soutien supplémentaire et des informations sur l'entretien en consultant http://www.aimtti.com/support. Numéro du manuel 48511-1730, 8 édition.

Deutsch

Sicherheit 53

Benutzerhandbücher, technische Daten, zusätzliche Support-und Serviceinformationen finden Sie unter http://www.aimtti.com/support Dieses Handbuch trägt die Nummer 48511-1730 Ausgabe 8.

Italiano

Sicurezza 54

I manuali dell'utente, le specifiche tecniche, l'assistenza aggiuntiva e le informazioni di servizio sono disponibili all'indirizzo, http://www.aimtti.com/support. Questomanuale è la versione 48511-1730 revisione 8.

Español

Seguridad 55

Puede encontrar manuales de usuario, especificaciones técnicas, ayuda adicional e información de mantenimiento en, http://www.aimtti.com/support. Este manual es el 48511-1730 versión 8.

Introduction

This DC electronic load is intended for use in investigating the behaviour of many different types of DC power sources such as batteries, solar cells, fuel cells or wind generators, as well as electronic power supply units.

It is designed to have very low internal resistance to allow operation at high currents with low voltage drop. The voltage of the source can be sensed either internally for convenience or externally for better accuracy.

The unit provides five different operating modes: constant current, constant power, constant resistance, constant conductance and constant voltage.

It operates over the current range 0 to 80 Amps and the voltage range 0 to 80 Volts with a continuous power dissipation capability of up to 400 Watts. It also permits short term dissipation up to 600W, for brief or intermittent testing of higher power sources.

A low voltage dropout facility is provided to protect sources such as batteries from damaging levels of discharge by reducing the load current when the source voltage falls below the dropout threshold setting.

An internal transient generator can repeatedly switch the load between two different operating levels, level A and level B. The frequency and duty cycle of the transients can be set over a wide range. The transients can also be initiated by an external logic signal. The transitions between the levels have a true linear slewing characteristic in all modes, with the slew-rate being adjustable over a wide range.

The unit meters and displays measured values of Volts & Amps and equivalent Watts & Ohms. A monitor output providing a voltage proportional to the current flowing allows the behaviour of a source to be viewed on an oscilloscope or external meter.

All adjustable system parameters can be set via numeric keyboard entry or via the digital remote interfaces for quick and convenient instrument control.

Up to 30 non-volatile storage locations can be used to store and recall instrument parameter set ups, ideal for test and calibration procedures.

An external control voltage can also be used to set the level of the load. Any desired waveform can be applied, with the internal slew rate control circuit remaining active to provide additional control.

The unit is fully protected against excessive current, power dissipation or internal temperature, and minimises audible noise by automatically controlling the fan speed according to the power dissipation.

Specification

Accuracy specifications apply for 18°C – 28ºC, using the rear panel terminals, at 50W load power (in normal 400W mode), after 30 minutes operation at the set conditions; regulation specifies variation at other powers. Setting accuracies apply with slew rate at the 'Default' setting. Superscript references are to footnotes on page 9, which provide further clarification.

INPUT

Maximum Input Ratings

Current:	80 Amps max. through the rear panel terminals. 30 Amps max. through the front panel terminals.
Voltage:	80 Volts max. while conducting current. Surge suppressors start to conduct at 120V (nominal), Max. non-repetitive surge energy: 80 Joules.
Power: continuous:	400 Watts max. up to 28ºC, derating to 360 watts at 40ºC.
(1) short term mode:	600 Watts max. up to 28ºC, for up to 60 seconds on-time, with off-time at least double the on-time.
Minimum Operating Voltage:	<2V at 80A; typically equivalent to 25mΩ above 100mV (at 4A).
Off State Leakage:	<10 mA (including voltage sense circuit input resistance).
Reverse Polarity:	Diode will conduct; 80 Amps max.
Isolation Voltage:	± 300Vdc max, either load input to chassis ground.

Input Terminals

Rear Panel Input:	Safety terminals accepting 5mm diameter wire, or 8mm spades, at 80 Amps max. or 4mm plugs at 30 Amps max.
Front Panel Input:	Safety terminals accepting 4mm diameter wire, 4mm plugs or 6·5mm spades. 30 Amps max.

External Voltage Sense

Connection:	Terminal block on rear panel. Sense selection by slide switch.
Input Impedance:	680kΩ each input to load negative.
Max. Sense Voltage Offset:	6V (allowance for backing-off supply for zero volt operation).

OPERATING MODES

Constant Current Mode (CC)

Current Ranges:	0 to 8 A (1 mA resolution) and 0 to 80 A (10 mA resolution).
Setting Accuracy:	± 0·2% ± 30 mA.
Regulation:	< 30 mA for 90% load power change (V > 2 Volts).
Temperature Coefficient:	< (±0·02% ± 5 mA) per ºC.
(2) Slew Rate Ranges:	8 A range: 2·5 Amp per s to 250 Amp per ms. 80 A range: 25 Amp per s to 2500 Amp per ms.
(3) Minimum transition time:	50 µs.

Constant Power Mode (CP)

Power Range:	0 to 400 (or 600) Watts.
Setting Accuracy:	± 0·5% ± 2 W ± 30 mA.
Regulation:	< 2% over 5 V to 75 V source voltage change (using remote sense).
Temperature Coefficient:	< (± 0·1% ± 5 mA) per ºC.
(2) Slew Rate Ranges:	40 W per s to 6000 W per ms.
(3) Minimum transition time:	150 µs.

Constant Resistance Mode (CR)

Resistance Ranges:	0·04 to 10 Ω (0·01 Ω resolution) and 2 to 400 Ω (0·1 Ω resolution).
Setting Accuracy:	±0·5% ± 2 digits ± 30 mA.
Regulation:	< 2% for 90% load power change (V > 2 Volts, using remote sense).
Temperature Coefficient:	< (±0·04% ± 5 mA) per ºC.
(2) Slew Rate Ranges:	10 Ω range: 1 Ω per s to 100 Ω per ms. 400 Ω range: 40 Ω per s to 4000 Ω per ms.
(3) Minimum transition time:	150 µs.

Constant Conductance Mode (CG)

Conductance Ranges:	<0·01 to 1 A/V (1 mA/V resolution) and <0·2 to 40 A/V (0·01 A/V resolution).
Setting Accuracy:	± 0·5% ± 2 digits ± 30 mA.
Regulation:	< 2% for 90% load power change (V > 2 Volts, using remote sense).
Temperature Coefficient:	< (±0·04% ± 5 mA) per ºC.
(2) Slew Rate Ranges:	1 A/V range: 0·1 A/V per s to >10 A/V per ms. 40 A/V range: 4 A/V per s to >400 A/V per ms.
(3) Minimum transition time:	150 µs.

Constant Voltage Mode (CV)

Voltage Ranges:	V_{min} to 8 V (1 mV resolution) and V_{min} to 80 V (10 mV resolution). V_{min} depends on current: typically <100mV at 4A to <2V at 80A.
Setting Accuracy:	± 0·2% ± 2 digits.
Regulation:	< 30 mV for 90% load power change (using external sense).
Temperature Coefficient:	< (0·02% + 1 mV) per ºC.
(2) Slew Rate Ranges:	8 V range: 0·8 V per s to 80 V per ms. 80 V range: 8 V per s to 800 V per ms.
(3) Minimum transition time:	150 µs.

TRANSIENT CONTROL

Transient Generator

Pulse Repetition Rate:	Adjustable from 0·01Hz (100 seconds) to 10kHz.
Pulse Duty Cycle:	1% to 99% (percentage of period at Level A).
Setting Accuracy:	±1 %

Slew Rate Control

The slew rate control applies to all changes of level whether caused by manual selection, remote control or the transient generator.

The level change is a linear slew between the two level settings. The range available in each mode is shown above.

Setting Accuracy:	± 10% (on linear part of slope, excluding high frequency aberrations).
Variation in Level Settings:	± 5 digits of specified setting resolution for present mode and range.

Oscillator Sync Output

Connection:	Terminal block on rear panel. Opto-isolated open collector output conducts during Level B phase of internal transient generator.
Ratings:	Max. off-state Voltage: 30V. On-state sink current: 2mA (typical).

DROPOUT VOLTAGE

The load will cease to conduct if the applied voltage falls below the Dropout Voltage setting; active in all modes except Constant Voltage. The Dropout Voltage setting is also the threshold for the Slow Start facility and acts as an offset voltage in Constant Resistance mode.

Setting Accuracy:	± 2% ± 20mV.

Slow Start

If Slow Start is enabled, the load will not conduct any current until the source voltage reaches the Dropout Voltage setting; it will then ramp the controlled variable up (in CC, CP and CG modes) or down (in CR and CV modes) to the Level setting at a rate determined by the Slew Rate setting.

METER SPECIFICATIONS

Display Type:	256 x112 pixel graphic LCD with white LED backlight.

Measured Values

Volts & Amps:	Measured values of current through and voltage across the load.
Watt & Ohms:	Power and equivalent load resistance, calculated from Volts and Amps.
Voltage Accuracy:	± 0·1% ± 2 digits.
Current Accuracy:	± 0·2% ± 3 digits.

CURRENT MONITOR OUTPUT

Output Terminals:	4mm safety sockets on front panel or terminal block on rear panel.
Output Impedance:	600Ω nominal, for >1MΩ load (e.g. oscilloscope).
Scaling:	50mV per Amp (4 Volts full scale).
Accuracy:	± 0·5% ± 5mV.
Common Mode Range:	± 3Vdc max. to load negative. A connection is required, see (4).

REMOTE CONTROL

Digital Remote Interfaces

The LD400P model provides LAN, USB, GPIB (optional) and RS232 interfaces for full remote control.

LAN:	Ethernet 100/10base-T connection with auto cross-over detection. 1.4 LXI Core 2011 compliant.
USB:	Standard USB 2.0 connection. Operates as virtual COM port.
GPIB (optional):	Conforming to IEEE488.1 and IEEE488.2. Capabilities: SH1, AH1, T6, L4, SR1, RL2, PP1, DC1, DT0, C0, E2.
RS232:	Standard 9-pin D connection. Baud rate: 9600.
Remote command processing time:	Typically <100ms between receiving the command terminator for a step voltage change at instrument and output beginning to change.

External Control Input Characteristics

Connection:	Terminal block on rear panel.
Input Impedance:	400kΩ each input to load negative.
Common Mode Range:	± 100V to load negative.

External Analogue Voltage Control

Operating Mode:	The applied voltage sets the operating level within the selected range.
Scaling:	4 Volts full scale.
Accuracy:	± 2% ± accuracy of selected range.
Common mode rejection:	Better than –66dB.

External Logic Level (TTL) Control

Operating Mode:	The applied signal selects between Level A and Level B settings.
Threshold:	+ 1·5V nominal. A logic high selects Level B.

Remote Disable Input

Connection:	Terminal block on rear panel. Input to the LED of an opto-isolator through 1kΩ resistor.
Threshold:	Apply >+3V to disable the load input. Max. Voltage 12V.

PROTECTION

Excess Power:	The unit will attempt to limit the power to approx 430 Watts; if this fails the unit will trip into the fault state at about 460 Watts. If intermittent mode operation is enabled, these levels are 610 W and 630 W.
Protection Current:	The input is disabled if the measured current exceeds a user set limit.
Excess Current:	The unit will trip into the fault state at nominally 92 Amps.
Protection Voltage:	The input is disabled if the measured voltage exceeds a user set limit.
Excess Voltage:	The unit will conduct a current pulse (to absorb inductively generated spikes) for 1ms at about 90V. The unit will trip into the fault state at nominally 106V Surge suppressors will start to conduct above 120V.
Temperature:	The unit will trip into the fault state if the heatsink temperature exceeds safe levels.
Sense Error:	The unit will trip into the fault state if the external voltage sense is more than 6V below the internal sense.

GENERAL

AC Input:	110V–120V or 220V–240V AC ±10%, 50/60Hz. Installation Category II.
Power Consumption:	30VA max. Mains lead rating: 6A minimum.
Operating Range:	+ 5ºC to + 40ºC, 20% to 80% RH.
Storage Range:	– 40ºC to + 70ºC.
Environmental:	Indoor use at altitudes up to 2000m, Pollution Degree 2.
Cooling:	Variable speed fan. Air exit at rear.
Safety & EMC:	Complies with EN61010-1 & EN61326-1. For details, request the EU Declaration of Conformity for this instrument via http://www.aimtti.com/support (serial no. needed).
Size:	130mm H (3U) x 212mm W (½ rack) x 435mm D.
Weight:	5.7 kg.
Option:	19-inch rack mount kit.

Specification Notes

(1) In 600 Watt short-term operation mode the dynamic response is not specified, and both the slew rate and the transient oscillator frequency range are restricted. The slew rate limitation applies also to external voltage control. This mode is primarily intended for limited duration operation at a fixed level setting.

(2) Slew Rate Ranges refer to the theoretical slope of the transition between two levels, regardless of whether that transition can be achieved when taking into account the level difference, the set transition duration, the minimum transition time, and the characteristics of the source.

(3) Minimum Transition Time specification is an indication of the fastest available transition using a benign source and low inductance connections, with a minimum terminal voltage of 5V and a minimum current of 1A. The actual performance attainable with electronically regulated power

supplies depends on the combination of source and load loop bandwidths and interconnection inductance.

(4) The common mode capability of the current monitor is to provide tolerance of voltage drops in cables. The monitor negative must be connected at some point to the load negative circuit.

Safety

This instrument is Safety Class I according to IEC classification and has been designed to meet the requirements of EN61010−1 (Safety Requirements for Electrical Equipment for Measurement, Control and Laboratory Use). It is an Installation Category II instrument intended for operation from a normal single phase supply.

This instrument has been tested in accordance with EN61010−1 and has been supplied in a safe condition. This instruction manual contains some information and warnings which have to be followed by the user to ensure safe operation and to retain the instrument in a safe condition.

This instrument has been designed for indoor use in a Pollution Degree 2 environment in the temperature range 5°C to 40°C, 20% −80% RH (non−condensing). It may occasionally be subjected to temperatures between +5° and −10°C without degradation of its safety. Do not operate while condensation is present.

Use of this instrument in a manner not specified by these instructions may impair the safety protection provided.

The unit does not have a fuse in the load circuit: if the source connected to the load is capable of generating substantial currents in the event of a fault, users should assess the risks involved and consider the inclusion of an appropriate fuse, circuit breaker or switch in the connection between the source and this load.

Do not operate the instrument outside its rated supply voltages or environmental range.

WARNING! THIS INSTRUMENT MUST BE EARTHED

Any interruption of the mains earth conductor inside or outside the instrument will make the instrument dangerous. Intentional interruption is prohibited. The protective action must not be negated by the use of an extension cord without a protective conductor.

When the instrument is connected to its supply, terminals may be live and opening the covers or removal of parts (except those to which access can be gained by hand) is likely to expose live parts. The apparatus shall be disconnected from all voltage sources before it is opened for any adjustment, replacement, maintenance or repair.

Any adjustment, maintenance and repair of the opened instrument under voltage shall be avoided as far as possible and, if inevitable, shall be carried out only by a skilled person who is aware of the hazard involved.

If the instrument is clearly defective, has been subject to mechanical damage, excessive moisture or chemical corrosion the safety protection may be impaired and the apparatus should be withdrawn from use and returned for checking and repair.

The instrument contains both encapsulated fuses and non-resetting thermal fuses; these are not replaceable by the user. The short-circuiting of these protective devices is prohibited.

Do not wet the instrument when cleaning it.

The following symbols are used on the instrument and in this manual:−

⚠ **Caution** refer to the accompanying documentation, incorrect operation may damage the instrument.

∼ Alternating Current.

O mains supply OFF.

I mains supply ON.

Mains Operating Voltage

The operating voltage of the instrument is shown on the rear panel. Should it be necessary to change the operating voltage from 230V to 115V or vice-versa, proceed as follows:

1. Disconnect the instrument from all voltage sources, including the mains and all inputs.
2. Remove the screws which hold the case upper to the chassis and lift off.
3. Unplug all cable connectors from the power supply PCB (don't pull on the wires).
4. Remove the five nuts which hold the power supply PCB in place, and lift it off the studs.
5. Fit the soldered links (alongside the transformers) for the required operating voltage:-

   For 230V fit only LK2 and LK5
   For 115V fit only LK1, LK3, LK4 and LK6.

   These links may be either tinned copper wire or zero-ohm resistors.
6. Refit the power supply PCB, ensuring that no wires are trapped. Check that all cables are correctly connected and that all five nuts are sufficiently tightened.
7. Refit the case upper.
8. To comply with safety standard requirements the operating voltage marked on the rear panel must be changed to clearly show the new voltage setting.

Mains Lead

Connect the instrument to the AC supply using the mains lead provided. Should a mains plug be required for a different type of mains outlet socket, use a suitably rated and approved 3-core mains lead set which is fitted with the required wall plug and an IEC60320 C13 connector for the instrument end. This instrument requires a lead rated at 6A for all mains supply voltages.

WARNING! THIS INSTRUMENT MUST BE EARTHED

Any interruption of the mains earth conductor inside or outside the instrument will make the instrument dangerous. Intentional interruption is prohibited.

Mounting

This instrument is suitable both for bench use and rack mounting. It is delivered with feet for bench mounting. The front feet include a tilt mechanism for optimal panel angle.

A rack kit for mounting one or two of these half-width 3U high units is available from the Manufacturers or their overseas agents; a blanking piece is also available for unused positions in the rack.

Ventilation

The unit is cooled by a variable speed fan which vents at the rear. Take care not to restrict the air inlets at the top, side and bottom panels or the exit at the rear. In rack-mounted situations allow adequate space around the instrument and/or use a fan tray for forced cooling.

If ducting is applied to the air outlet, additional extraction is required.

Fuses

Most fuses in this instrument are not user replaceable. The exception is an internal fuse on the power supply PCB, which is intended to protect the unit from the accidental connection of 230V mains supply to a unit configured for 115V operation. Before replacing this fuse, ensure that the unit is configured correctly, as described above.

The replacement fuse must be a 20x5mm 500mA (T) 250Vac rated HBC (ceramic tube) type.

Front Panel Connections

Load Input

The INPUT terminals for the load circuit on the front panel accept 4mm plugs into the end, 2mm diameter wire into the cross hole, or ¼ inch spade connections. Their maximum current rating is 30 Amps. For higher currents (or lower circuit resistance) use the rear panel terminals; **do not use both simultaneously**.

The load circuit is isolated from ground, and potentials up to ± 300 Volts DC to ground are allowed, but it is essential to observe safe insulation practice.

Ensure that the source is connected with the correct polarity.
The maximum current through these terminals is 30 Amps.
The maximum voltage allowed across the load is 80 Volts.

The unit does not have a fuse in the load circuit: ensure that the maximum prospective fault current is limited to a safe level, see below.

Current Monitor Output

The Current Monitor terminals provide a voltage proportional to the load current flowing with a scaling factor of 50 mV per Amp (4 Volts for 80 Amps full scale). The output impedance is nominally 600Ω and the calibration assumes a high impedance load such as an oscilloscope.

A differential driver allows a common mode range of ± 3 Volts between the negative monitor terminal and the negative load terminal. The output will be inaccurate (and the unit may be damaged) if voltages exceeding this are applied.

The common mode capability is intended to accommodate any voltage drop in the load circuit cables and to avoid difficulties with current loops. There should be an external connection between the monitor negative and the load negative at some point in the circuit, wherever is most convenient, except this is not normally necessary for a battery powered portable DMM.

Rear Panel Connections

Load Input

The INPUT terminals for the load circuit on the rear panel accept 4mm plugs into the end (4mm plugs have a current rating of 32 Amps or less), 5mm diameter wire into the cross hole or 8mm spade connections (with a maximum blade width of 16mm).

The wiring and connection arrangement must be capable of supporting the current required; for 80 Amps, 16mm^2 cable is needed.

The load circuit is isolated from ground, and potentials up to ± 300 Volts DC to ground are allowed, but it is essential to observe safe insulation practice.

Ensure that the source is connected with the correct polarity.
The maximum current through these terminals is 80 Amps.
The maximum voltage allowed across the load is 80 Volts.

The unit does not have a fuse in the load circuit: ensure that the maximum prospective fault current is limited to a safe level, see below.

Prospective Fault Current Protection

This unit is not intended to act as an overcurrent fault protection device for the source being tested. If the source itself also does not include suitable overcurrent protection, and is capable of generating substantial currents in the event of a fault, users should assess the risks involved and consider the inclusion of an appropriate fuse, circuit breaker or easily accessible switch in the connection between the source and this load.

Terminal Blocks

All other rear panel connections are made via the screw-less terminal blocks. To make connections to the terminal blocks, use a flat screwdriver to press the spring-loaded orange actuator inwards to open the wire clamp; insert the wire end fully into the hole and release the actuator. Ensure the wire is properly gripped. Take care to observe the marked polarity.

Current Monitor Output

The top pair of terminals, marked CURRENT MONITOR, provide the current monitor output. They are wired in parallel with the front panel Current Monitor sockets and the same requirements apply, see above.

Remote Control Voltage Input

The CONTROL VOLTAGE terminals are used in two operating modes of the instrument:

In EXTERNAL VOLTAGE mode an analogue signal applied here sets the level of the load; the scaling is 4 Volts full scale.

In EXTERNAL TTL mode, a logic signal applied here selects either the LEVEL A setting (logic low) or the LEVEL B setting (logic high). The switching threshold is nominally +1·5V.

⚠ These terminals will tolerate a common mode voltage of up to ±100 Volts relative to the negative terminal of the load input. The input impedance is 400kΩ from each terminal to the load negative, so a common mode current will flow.

External Voltage Sense Input

To avoid errors in sensing the voltage of the source caused by voltage drops in the high current wiring, connect the EXTERNAL SENSE terminals to the external circuit at the point where the voltage needs to be measured (normally at the output terminals of the source under test). Move the VOLTAGE SENSE SELECT slide switch on the rear panel to the EXT position.

⚠ Ensure that the source is connected with the correct polarity.
These terminals must not be connected to any voltage other than the source that is connected to the load input.

Remote Disable Input

Apply greater than +3V (preferably +5V) to the DISABLE INPUT terminals to disable the load input; these are the input to an opto-coupler, through 1kΩ, and are galvanically isolated from all other terminals. The input current is less than 2·5mA at 5V.

⚠ The maximum input voltage is +12Vdc. Avoid reverse polarity.

Oscillator Sync Output

The SYNC OUTPUT is an open collector output of an opto-coupler driven by the signal from the internal oscillator; it is galvanically isolated from all other terminals. A suitable pull-up resistor and power supply (e.g. 4·7kΩ to +5V) are needed to generate a usable signal, which could be used to trigger an oscilloscope. There is a 1kΩ series protection resistor.

⚠ The maximum collector supply voltage is +30Vdc. Avoid reverse polarity.
The load resistor should be chosen to source ideally 1mA, maximum 2mA.

Digital Remote Control Connections

The LD400P model provides full remote-control capabilities through standard LAN, USB, optional GPIB and RS232 interfaces. All of these are isolated from the load input terminals of the unit. The USB, GPIB (optional) and RS232 interfaces are connected to chassis ground, and care must be taken to avoid introducing ground loops. The LAN interface is isolated by standard network transformers.

Full details are given in the ‘Remote Interface Configuration’ chapter later in this manual.

Initial Operation

This instrument provides a controllable DC load (a power sink) intended for testing all forms of DC power supply including batteries, photo-voltaic cells, fuel cells, turbines and generators as well as electronic power supply units.

Organisation of this manual

The paragraphs below are intended to briefly introduce the particular features of this instrument and the terminology used in this manual. More technical details are given in later chapters of the manual.

The next chapter describes the general operation of the front panel and its display, followed by full instructions for setting each parameter. A short chapter then describes the Analogue Remote Control facilities, including level selection by a logic level signal.

Following that there is a chapter giving some application notes and implementation details, which gives more information on some practical difficulties which may occasionally be encountered in each operating mode, together with some advice on mitigating strategies.

Finally the digital remote control interfaces and command set of the LD400P programmable version of the instrument are covered.

Load modes

The power dissipating stage in this load is fundamentally an adjustable current sink, which conducts a current that does not depend on the voltage presently applied from the source being investigated. This is known as Constant Current operation.

An analogue multiplier is used to offer other operating modes in which the current does depend on the applied voltage in a known way, providing a choice of Constant Power, Constant Resistance, or Constant Conductance characteristics. A fifth mode, Constant Voltage, operates in a completely different manner to adjust the current to whatever value is needed to obtain the desired voltage from the source.

Constant and Transient Operation

The load offers two independent level settings, referred to as Level A and Level B. Two keys marked A and B in the LEVEL SELECT area of the front panel allow the choice of which level is active.

Transient changes in the magnitude of the load are generated by switching between the two levels. The transition between the two is a straight line at a slew rate that is specified by the user. The switching between the two levels can be controlled either by an internal transient oscillator, which has adjustable frequency and duty cycle, or an external logic (TTL level) signal.

There is no restriction on which of the two levels is the larger.

Dropout voltage

The primary purpose of the dropout facility is to protect batteries from being excessively discharged. When the source voltage falls below the Dropout threshold voltage setting, the load will reduce the current it draws, eventually to zero. This is a dynamic limit, not a latched state, so if the source voltage recovers above the threshold (as batteries often do) then the load will conduct current again.

Slow Start

The slow start facility causes the current taken by the load to rise gently, at the rate determined by the slew rate setting, when the load is enabled or when the source voltage rises above the Dropout Voltage threshold setting. It also causes the current to fall at the same rate when the load input is disabled. This facility is particularly useful in Constant Power mode, to avoid a latch-up condition when the source is started; see the ‘Application Notes’ chapter for details.

Short Term Operation up to 600 Watts

The instrument has provision for applications which require the dissipation of higher than normal powers for a limited period of time. It imposes a limit on the combination of power and time by first displaying a warning message and then disabling the input. Full details of the constraints that apply to this mode are given later, on page 26.

Voltage and Current Limit Conditions

The unit has provision for the user to specify limits on the permitted measured value of voltage or current. If either of these limits is exceeded then the input will be disabled.

Power Limit

The unit continuously monitors the internal power dissipation and varies the speed of the fan accordingly. If the dissipation rises above about 430 (or 610) Watts, a hardware power limit circuit will come into operation and attempt to constrain the load current to control the dissipation. The unit is then operating in a non-linear mode, which will change the stability conditions. If the power limit circuit fails to prevent the power rising above a slightly higher fault threshold (perhaps because of instability) then the fault detector will be tripped and the load will cease to conduct.

Input Condition Lamps

Two lamps above the Input Enable switch indicate the operating state of the unit. They are both off when the input is disabled. The green lamp lights when the input is enabled, and if the load is operating normally then the yellow lamp will not be lit.

The yellow lamps lights if the load cannot conduct the required current, with a message on the status line at the top right of the display distinguishing between the three possible reasons:

- **High Power**: the power limit circuit is operating as described above.
- **Dropout**: the voltage applied from the source is below the setting of the Dropout voltage.
- **Low Voltage**: the power stage is in the minimum resistance condition, because the voltage available from the source is insufficient to maintain the current level required.

The minimum resistance condition will occur either if the source is switched off and is not providing any voltage at all, or if the voltage drop across the connection leads is causing the actual input voltage at the load to be below its minimum operating level. Note that if the source voltage is suddenly applied while the load circuit is in this state, then a current transient will probably occur.

If only the yellow lamp is lit, with the green lamp off, then a persistent fault condition exists.

Fault Conditions

The unit detects (in hardware) the following fault conditions:

- Current above about 92 Amps.
- Power in excess of about 450 (or 630) Watts (that the power limit circuit has not succeeded in controlling to the lower threshold as described above).
- Voltage above about 106 Volts.
- Excessive difference between external and internal voltage sense values.
- Excessive heatsink temperature.
- Fan failure.

The fault detectors for excess current, power and voltage have filter networks with a time-constant of a few milliseconds to allow brief transients to be handled.

When any of these fault conditions occurs, the input is disabled, so the unit will cease to conduct current and a fault message will be displayed. An excessive current or power condition will disappear as soon as the input is disabled, but any of the other conditions will cause the yellow lamp only to remain lit, and the message **Fault** to show on the status line, until it is cleared.

Connecting the Load to the Source

The INPUT terminals of the load must be connected to the source to be tested using sufficiently low resistance and low inductance connections. Inductance in the interconnection can have a significant adverse impact on the stability of the source and load combination. The wiring should be as short and as thick as possible. It is essential that the voltage drop across the connecting leads is sufficiently less than the source voltage to leave enough working voltage across the load. This requirement must be met at the load input terminals even if external sensing is employed. The front panel terminals may be used for currents up to 30 Amps; for higher currents the rear panel terminals must be used.

The load terminals of the instrument are floating from ground, and may be used at potentials of up to ± 300 Volts DC from ground. Connection to any AC mains circuit is not permitted. Ensure that all wiring is safely insulated for the working voltage involved.

Prospective Fault Current

The instrument detects any fault condition and responds by disabling the load by turning off the power devices. However there is no internal fuse in the load circuit, so the possibility exists of a high current passing if the external source applies a condition so far beyond the rating of the unit that a power FET is destroyed, which can sometimes result in the device becoming a short circuit. If the source is capable of supplying a dangerous level of prospective fault current, and does not itself contain a fuse or circuit breaker, or cannot be easily turned off, users should consider adding an external fuse to the circuit, particularly if unattended operation is likely.

External Voltage Sensing

When the load is conducting current there will be a voltage drop in the connecting leads. In order to obtain the expected load characteristic in any mode other than Constant Current, external voltage sensing leads should be connected from the terminals of the source to the external sense inputs on the rear panel of the load. In Constant Current (CC) mode external voltage sensing only improves the accuracy of the meter readings; it does not affect the behaviour of the load.

To avoid impact on the stability margin do not add phase shift in the sensing circuit; in particular, the use of decoupling capacitors should be avoided. If the sensing connections are likely to be subject to RF or magnetic fields, use twisted pair cable with an overall shield. The shield should be grounded or connected to load negative.

The rear panel VOLTAGE SENSE SELECT switch selects between INT (internal) and EXT (external) voltage sensing. Note that the internal sensing circuit is always used for the power and voltage protection circuits.

Caution: The unit is designed to permit up to 6 Volts difference between internal and external sensing (in order to permit zero voltage operation using an offsetting battery); if this switch is in the EXT position, but the sense terminals are not connected, the unit will not detect the fault condition until the source voltage exceeds this value. This can result in unexpected operation.

Remote Input Disable

This input is provided for remote override of the INPUT ENABLE function of the load, possibly for safety reasons. It is available in all operating modes of the instrument. It is a fully floating input to an opto-isolator: apply 3 to 12 volts (observing polarity) to disable the load. The load is only enabled if this signal is absent and the input has been enabled with the front panel controls.

Switching On

The line POWER (∿) switch is at the bottom left of the front panel. Before switching on (I), check that the line operating voltage of the unit (marked on the rear panel) is suitable for the local supply. After switching the power on (I) the LCD should light and display firmware version information. Avoid turning off the power until the instrument is fully initialised and the home screen is displayed.

Front Panel Operation

In this manual, front panel labels are shown as they appear, in capitals, e.g. LEVEL SELECT. Individual key names are shown in bold, e.g. **Transient**, and the blue soft-keys are referred to by their present function, as labelled on the bottom line of the display, shown in bold italics, e.g. ***Recall***. Text or messages displayed on the LCD are shown in bold, e.g. **Enabled***,* **Utilities**.

Keys and Δ Adjust

The front panel keys are divided into four areas. The numeric keys and the blue keys below the display are used to configure the instrument through the menu structure described below. The **CE** key cancels the last numeric keystroke while the **Home** key cancels an entire menu selection and returns to the home screen. The **Home** key is also used for the 'return to local' request from digital remote control.

The three LEVEL SELECT keys (**A**, **B** and **Transient**) determine which of the two level settings is active, or engage the transient mode which switches between them. The associated lamps indicate the presently active state; these keys are also used to return from external analogue control to manual selection.

The Δ ADJUST knob and its three associated keys (**Levels**, **Off** and **Transient**) are used to choose and modify the existing value of any one of the numeric parameters of the instrument.

The ENABLE key in the INPUT section (referred to as the INPUT ENABLE key) controls the load, with alternate presses switching between the conducting and non-conducting conditions. The green lamp shows if the input is enabled; the yellow lamp reports if the power stage is saturated, as described in the paragraph 'Input Condition Lamps' in the 'Initial Operation' chapter above.

The Display and the Home Screen

All parameter settings and meter readings are shown on the backlit liquid crystal display (LCD). At power up the instrument initialises to the home screen, which is the normal display during operation of the unit. This screen displays all of the load meter readings and the most important load parameter settings as described below, and is also the top level of the soft-key driven menu structure. The display changes to show other screens as selections are made to enter parameter values and then returns to the home screen when entry is complete.

Status Line

The status line of the instrument is visible along the top of the display at all times except when one of the store, recall or utilities menus is being shown. It indicates the current status of the instrument as follows (in order, from left to right across the display):

- The load mode field indicates the present load mode – **CC**, **CP**, **CR**, **CG** or **CV**.
- **Slow** is displayed when slow start operation has been enabled.
- **Slew** is displayed as a warning when the present slew rate setting is too slow with regards to the level difference, transient frequency and duty cycle, see 'Slew Rate Error Conditions' (on page 24 below).
- **Lim** is displayed when either of the user defined current or voltage limits is enabled.
- The level select field (in the centre) indicates which input level or control method is currently selected – **Level A, Level B, Transient, Ext V** or **Ext TTL**.
- The LAN field indicates the status of the Local Area Network (if fitted). When there is no LAN connection the field displays . While a connection is being established the indicator will flash between and , and then while connected the field will show . See the 'Remote Interface Configuration' chapter for more information.
- The input status field (at the right hand end) indicates the instrument's present load input condition – **Disabled**, **Enabled**, **Low Voltage**, **Dropout**, **Power Limit** or **Fault**, as described in the paragraph on 'Input Condition Lamps' (on page 16) above.

Home Screen Data

Below the status line are the meter displays which show the actual measured source voltage and, once the load is enabled, the load current. Below this, the screen is divided into three areas. On the left, under the heading **METERS**, the display shows the present power in the load and the equivalent resistance; these values are computed from the measured voltage and current readings. Any of these meter displays will show **HIGH** (or **MAX** for power) if the measured value is beyond the capabilities of the unit.

In the centre, under the heading **LEVELS**, the display shows the present settings for Level A and Level B (the units depend on the operating mode) and the Dropout Voltage setting.

On the right, under the heading **TRANSIENT**, the display shows the settings for the Frequency and Duty cycle of the internal oscillator, and the Slew Rate of the transitions.

All six of these parameters can be modified either by direct numeric entry or by using the knob to increment or decrement the present value as described below.

Soft-Keys

The soft-keys are the six blue keys found directly below the LCD. The function of each of these keys changes as the instrument is operated. The available function is shown on the bottom line of the display in a tab above each key. If any of the keys have no functionality in a particular menu then the tab is lowered to show it is inactive.

On the home screen there are two sets of soft-key functions available; the right hand key, alternately labelled ***More >*** or ***More <*** switches between the two. All additional menus are accessed through the soft-keys in one of these sets.

The major parameters accessible in the first set are:

Mode	To select the operating mode.
Limits	To impose cut-off limits on the applied voltage or current values, or to enter the 600 Watt short term operation mode.
Level	To enter numeric values for Level A and Level B.
Dropout	To enter a numeric value for the Dropout Voltage.
Transient	To access a second level to set-up the transient functionality.

The second set includes:

Battery	To setup and view battery cell discharge characterisation.
Store & Recall	To setup, review and use saved settings of the unit.
Extern	To enable or disable analogue remote control of the level, or logic (TTL) level selection between the two levels, as described in the chapter on ‘Analogue Remote Control’.
Utilities	To configure some secondary facilities of the instrument and to set parameters of the remote interfaces.

The **Transient** second level menu (when selected from the first set above) includes:

Freq	To enter a numeric value for the Frequency of the internal oscillator.
Duty	To enter a numeric value for the Duty cycle of the internal oscillator.
Slew	To enter a numeric value for the Slew Rate of the transitions.
Slow	To enable or disable the Slow start and stop facility.

On most of the lower level menus, the left hand key, labelled ***Back*** or ***Cancel***, can be used to return to the previous menu. This allows exploration of the various menus without risk of putting the unit into unexpected configurations. ***Back*** returns to the previous menu, keeping any changes that have been made in the current menu, while ***Cancel*** (if offered) will undo any change made

before reverting to the previous menu. The **Home** key reverts directly to the home screen and the top level of the menu structure (also abandoning any incomplete value entry).

General Numeric Entry of Parameters

All user modifiable load parameters can be set using the numeric keypad. The desired parameter is first selected from the menu using the soft-keys. The display then changes to show the parameter entry screen which indicates the name of the parameter, its present value prior to editing, and in most cases the entry limits and resolution. A message prompting for the entry of the new value is shown. When any number key is pressed this prompt is removed and replaced by the new value being constructed, and the soft-key labels change to show a list of units applicable to the parameter being edited. The **CE** key deletes individual keystrokes; alternatively the entire entry may be cancelled by pressing either the **Home** key or the ***Cancel*** soft-key.

Once the number entry is complete it must be terminated by pressing the required units soft-key (choosing ***A*** or ***mA***, for example). The value is then checked against the parameter limits and, if it falls within the allowed range, it is accepted and immediately implemented as the new value for that parameter. If the value does not fall within the permitted range then an error message is displayed and the buzzer will sound. If applicable the entry may be rounded to fit within the specified parameter resolution.

Paragraphs below describe particular features associated with each parameter.

Variation of Parameter Values using Δ Adjust

The level and transient parameters of the load can be adjusted by incrementing or decrementing the present value using either the knob or soft-keys.

Note: this adjustment mechanism is only available whilst the instrument is on the home screen.

Two keys above the knob, labelled **Levels** and **Transient**, select the parameter to be modified and initiate the adjustment. Pressing the **Levels** key initially selects Level A; a second press selects Level B and a third press selects the Dropout Voltage setting. The cycle can be repeated if required. Similarly, multiple presses of the **Transient** key select between Frequency, Duty Cycle and Slew Rate. A lamp above each of these keys blinks whilst adjustment is enabled and four cursor soft-keys are shown.

The display of the selected parameter value is expanded to fill its edit box, with an adjustment indicator (⇕) positioned under the digit to be varied. The ◄ and ► soft-keys can be used to select which digit position will be adjusted, and then either the knob or the ▲and ▼ soft-keys can be used to increment or decrement the value at that position. Digits to the left of the one being varied are automatically incremented or decremented when the decade overflow or underflow point is reached. Digits to the right of the one being varied always remain unchanged unless a point of decade resolution change is reached, in which case digits to the right may be lost through truncation. If the least significant digit is being incremented and a decade resolution change is reached, the new least significant digit becomes the one being adjusted.

Each change made is applied immediately, so long as the value remains within the permitted limits of that parameter. If an increment or decrement of the current position would exceed a range limit then the parameter value remains unchanged; partial adjustments are not made.

Pressing the ***Off*** soft-key or the **Off** key above the knob (or the **Home** key) ends the adjustment, retaining the new value, and returns the display to the home screen. Pressing the ***Cancel*** soft-key ends the adjustment and restores the last parameter to the value it had when it was selected for adjustment.

Configuring the Load

The normal sequence of operation is to select the load Mode, set the required operating Level and Dropout Voltage, and then Enable the input. If transient operation is required, the second Level setting and the Slew Rate parameters must be set, as well as the frequency and duty cycle of the internal oscillator if it is to be used.

The home screen shows all the parameter settings, which can be viewed before the input is enabled. All parameters except load Mode and level Range can be adjusted as required while the input is enabled. Changing either the load mode or the level range while the input is enabled will trip a fault detector and cause the input to be disabled before the change is implemented.

Selection of Load Mode

The first action in configuring the unit for a particular application is to choose the load mode, which determines how the current drawn by the load varies with the applied voltage (V). The ***Mode*** soft-key on the home screen opens a menu offering the various modes listed in the table below. More detailed descriptions of the properties of each mode are given in the 'Application Notes' chapter later in this manual.

Changing the mode requires the load input to be disabled, which will be done automatically if not already done by the user. The display returns to the home screen as soon as a mode is selected.

The available operating modes are:

CC	Constant Current	The current is the Level setting, independent of voltage.
CP	Constant Power	Implements I = W / V where W is the Level setting.
CG	Constant Conductance	Implements I = V * G where G is the Level setting.
CR	Constant Resistance	Implements $I = (V - V_{dropout}) / R$ where R is the Level setting and $V_{dropout}$ is the Dropout Voltage setting.
CV	Constant Voltage	The load sinks whatever current is necessary to maintain the terminal voltage equal to the Level setting.

Level A and Level B Setting and Range Selection

Pressing the ***Level*** soft-key on the home screen initially opens the level setting prompt for either Level A or Level B, depending on which was altered last. The right hand soft-keys, labelled ***A SET*** and ***B SET***, can be used to switch the prompt to the other level. If the level being edited is not currently active in controlling the load, a ***Select*** soft-key will appear allowing it to be made the active selection if required. A new numeric value can be entered as described above. Separate settings for both level values are retained for each operating mode.

There are two ranges for level setting in each of the load operating modes except constant power. These differ in both the range of values permitted and the entry resolution; the present values are shown in the number prompt. Pressing the ***Range*** soft-key opens the range selection menu, with the presently active range highlighted. The selection can be changed using either the ▲ or ▼ soft-keys or the knob. Pressing the ***OK*** soft-key implements the new selection. Changing the range requires the load input to be disabled, which will be done automatically if not already done by the user. Alternatively pressing the ***Cancel*** soft-key leaves the range unchanged. In either case the instrument returns to the level setting menu. Changing from a high resolution range to a low resolution range may result in the truncation of the set level. If the range is changed and the set level value exceeds the limits for the new range, the value is updated to the maximum or minimum of the new range.

The level setting menu remains on screen, allowing further changes to be made, until either the ***Back*** soft-key or the **Home** key is pressed to return to the home screen.

Dropout Voltage

Pressing the ***Dropout*** soft-key on the home screen opens the Dropout Voltage setting prompt. In the usual way this displays the present Dropout Voltage setting, the range in which the new value can be set, and the maximum resolution of the setting. After entry of the number press either the ***mV*** or ***V*** soft-key to implement the setting. Either the ***Back*** soft-key or the **Home** key returns the display to the home screen.

The primary purpose of the dropout voltage setting is to protect batteries from excessive discharge. The load will cease to conduct current when the applied voltage from the source falls

below this setting. Note that this is a dynamic limit, not a latching condition, so if there is any wiring resistance between the source and the voltage sensing point of the load then there will be a soft entry into the dropout condition – the series voltage drop will reduce as the current starts to fall, so raising the voltage measured by the load. Batteries may also recover as the load is reduced, raising the voltage back above the dropout threshold so the load resumes conduction. There is a possibility of hunting or instability in this operating condition. The front panel lamp will show yellow and the status line report **Dropout** when the dropout circuit becomes active.

The Dropout Voltage setting has a special effect in Constant Resistance (CR) mode, when it provides a starting point for the constant resistance characteristic (see the description in the 'Application Notes' chapter for more detail). The Dropout facility is not available in Constant Voltage (CV) mode as it conflicts with the basic intention of that mode.

The Dropout Voltage setting is also used as the threshold for the Slow Start circuit (see below).

If the dropout facility is not required, set the Dropout Voltage to 0 Volts. The status line will show **Dropout** as a warning whenever this setting is above 0V and no current is being drawn.

Slow Start

The purpose of the slow start circuit is to ramp the demand of the load up slowly from zero to the final value. The rate of rise is determined by the Slew Rate setting. The ramp starts either when the Input is Enabled, or when the voltage from the attached source passes the level of the Dropout Voltage setting. When the Input is Disabled the demand will ramp back down to provide a slow stop (assuming, of course, that the source voltage remains active).

The setting for this facility is on the Transient menu, so first press the ***Trans*** soft-key on the home screen to enter the Transient menu, and then press the ***Slow*** soft-key on that menu to access a soft-key to alternately enable or disable slow start. While it is enabled, **Slow** will appear on the status line of the instrument. Press the ***Back*** soft-key to return to the transient menu or the **Home** key to return directly to the home screen.

In CP (constant power) mode the slow start facility will almost always be needed, to avoid the lock-up condition that will occur at low voltages (when attaining the desired power requires a high current) if the source does not have sufficient current capability to reach the power level demanded. See the 'Application Notes' chapter later for a discussion of some of the implications of the fact that constant power mode causes the load to act as a negative resistance.

In CR (constant resistance) mode the load will start at the maximum Ohms level of the active range and ramp down to the final Ohms value. Because the initial resistance is not infinite there will be an initial current step before the ramp starts when the load becomes active. Note also that a linear slew in Ohms is not a linear slew in Amps if the source voltage is constant.

In CV (constant voltage) mode the setting will start at the maximum Voltage level of the active range and ramp down to the final Voltage value. The load will not start to conduct current until the setting ramps down past the open circuit voltage of the attached source. After this the current will increase at a rate determined by the characteristics of the source and its effective output resistance, until the set-point voltage is reached. If the source enters a constant current mode then the load cannot impose a slow current ramp.

Introduction to Transient Operation

The unit includes the capability of generating load transients, which are intended to help in testing the transient response of a source. Transient operation is available in all operating modes. A transient is an alternation between the Level A and Level B settings, with the transition between the two levels being a straight line (in the controlled variable of the active mode) whose slope is determined by the Slew Rate setting. Note that the transient is specified by setting the two absolute levels, not the difference between them (as is the case with some electronic loads). There is no limitation on which of the two levels is the larger.

Transients can be timed either by an internal oscillator or by an external TTL signal (see the description of the ***Extern*** menu on page 29 below). Transient operation controlled by the internal oscillator always starts with the Level A setting, including a transition from Level B if required.

The oscillator starts when the last of the three required conditions occurs: either when the input is **Enabled**, or when the **Transient** level control key is selected, or (if the slow start circuit is active) when the source voltage rises above the Dropout Voltage threshold.

It is also possible to use the External Analogue Voltage control mode to generate transients of any required shape by using an external generator to produce the required waveform. This is also controlled by the ***Extern*** menu (page 29). Note that the external signal still passes through the internal slew rate control circuits, so appropriate Slew Rate settings need to be made.

To end Transient operation (whether internal or external) and return to a constant level press either the **A** or **B** key (in the LEVEL SELECT section) as required.

Transient Menu

Press the ***Trans*** soft-key on the home screen to enter the Transient menu which gives access to the controls for the Frequency and Duty Cycle of the internal oscillator and the Slew Rate settings which apply to all changes in level, however caused.

These parameters can also be changed using the Δ ADJUST facilities described previously, but to do this the unit must be on the home screen not the Transient menu.

Note that changes to the transient frequency or duty cycle do not take effect until the end of the present cycle, at the return to Level A. This is particularly noticeable at very low frequencies. Disabling and then re-enabling the load input will also immediately start a new cycle.

Transient Frequency

The repetition rate of the internally timed transients can be set in terms of frequency or period. Pressing the ***Freq*** or ***Period*** soft-key on the Transient menu opens the Frequency and Period setting menu. A new value can be entered, in the present representation, in the usual manner. Two soft-keys labelled ***Freq*** *and* ***Period*** allow the alternative representation to be chosen. Press the ***Back*** soft-key to return to the transient menu or the **Home** key to return to the home screen. The soft-key label on the transient menu will show either ***Freq*** or ***Period*** to reflect the most recent choice of representation.

Transient Duty Cycle

Pressing the ***Duty*** soft-key on the Transient menu opens the Duty cycle setting menu. This setting specifies the percentage of each repetition spent at the Level A setting, including the transition from Level B to Level A; the transition back to Level B and the time stable at that setting occupies the remainder of the cycle.

The available duty cycle range is 1% to 99%, but note that the time duration of each portion of the cycle must be sufficient for the transition defined by the Slew Rate and Level settings to occur; otherwise the load will never reach the steady state at the set value before the next transition in the opposite direction starts. This error condition is discussed below. Press the ***Back*** soft-key to return to the Transient menu or the **Home** key to return to the home screen.

Slew Rate

Pressing the ***Slew*** soft-key on the Transient menu opens the Slew Rate setting menu. This Slew Rate setting sets the slope of the transitions between the two level settings. It applies to all changes in level whether caused by manual setting, adjustment using the knob, the internal transient generator or external voltage control. It is also used to determine the rate of rise and fall when the Slow Start circuit is triggered.

The slew control circuit introduces a small additional error into the accuracy of the level settings, which varies depending on the actual Slew Rate setting. If the dynamic facilities of the load are not being used, then the ***Default*** soft-key sets the circuit to the calibrated state for best accuracy.

The circuit provides a linear transition in the control value of the active mode, so, for example, in Constant Power (CP) mode the slew rate is expressed in Watts per microsecond, Watts per

millisecond or (at very slow rates) Watts per second. The shape of the current transition is therefore not necessarily linear in any mode other than Constant Current (CC).

In addition to the usual numeric prompt this menu also shows the calculated theoretical transition time considering the present Slew Rate setting and the difference between Level A and Level B. This theoretical value takes no account of any dependency of the actual transition time on the source and load characteristics, impedances and interconnection inductance which may occur, particularly at fast slew rates. The user must ensure that the transition time which results from the values entered is not shorter than the minimum attainable transition time in the present mode, which is documented in the Specification. It is emphasised that severe overshoots can occur if the slew rate is set faster than the combination of source and load is capable of supporting (which may be slower than the value in the Specification, which applies to optimal conditions), see the section on 'Fast Slew Rate Limitations' below.

Pressing the ***Range*** soft-key produces a display of the limits of available slew rate for the present operating mode and range. If a slew rate value is entered that falls outside the parameter limit range, an error message is displayed, followed also by a display of these range limits.

The bandwidth of the power stages of the load is reduced (by changing the compensation networks) when the slew rate is set to less than 0·1% of the maximum slew rate for the given load mode and range. For example, on the 80A range in constant current mode, the maximum slew rate setting is 2.5A/us, so the bandwidth is reduced when the slew rate is set < 2.5A/ms. This change is made even if the transient facilities are not being used, and alters the dynamic behaviour of the unit. This may improve stability with some difficult combinations of source and load characteristics.

Upon completion of the slew rate setting update, press the ***Back*** soft-key to return to the transient menu or the **Home** key to return to the home screen.

Slow Slew Rate Limitations

There is a lower limit to the slew rate value that can be used, which is determined by the combination of slew rate, frequency, duty cycle, and the difference between the two levels. If the requested transition time (which is the difference between the level settings divided by the slew rate) is longer than the available time (which is the oscillator period multiplied by the smaller duty factor), then the transition will not complete before the oscillator initiates a return to the other level. As a result, the intended level setting will never be reached. In this case, **Slew** is displayed in the status line as a warning.

Fast Slew Rate Limitations

In practice there are a number of limitations on the fastest slew rate actually attainable. One is the minimum transition time of the power stages of the load (which depends on the operating mode – see the Specification). If a combination of a fast slew rate and a small change in level imply a transition time shorter than this, then the settling time of the power stage will dominate.

The dynamic behaviour of a source and load combination at high slew rates depends on many factors, particularly interconnection inductance and the damping factor of feedback loops. In addition, the response of the power stages of the load is slower when operated at very low or high currents, or at low voltages. In many circumstances, a lower slew rate setting will be needed to avoid aberrations.

If an attempt is made to set a slew rate faster than is possible in the circumstances, then significant overshoots and extended settling times can arise. When configuring fast transitions approaching the limits of the capabilities of the unit, it is strongly recommended that the current monitor output be viewed on an oscilloscope to verify the results actually obtained. Particular care should be taken to avoid a fast transition down to a low current, as this may result in the power stage entering the cut-off state, which incurs a long recovery time and possibly multiple current pulses.

In CR (constant resistance) mode, where the current is inversely related to the resistance transition, it is particularly difficult to predict the maximum useful slew rate setting.

Battery Test Feature

This feature allows the characterisation of battery cell discharges and can be used in all load modes except constant voltage mode.

Whilst discharging a battery cell, the live battery cell capacity in both Watt hours and Amp hours are simultaneously shown on the display. The maximum capacity is limited to 1000Wh and 1000Ah.

The battery test feature can be accessed from the main menu by pressing the ***Battery*** soft-key.

Pressing the ***Level*** soft-key on the home screen initially opens the load level setting prompt for either Level A or Level B, depending on which was altered last. The right hand soft-keys, labelled ***A SET*** and ***B SET***, can be used to switch the prompt to the other level. If the level being edited is not currently active in controlling the load, a ***Select*** soft-key will appear allowing it to be made the active selection if required. Separate settings for both level values are retained for each operating mode.

There are two ranges for level setting in each of the load operating modes except constant power. These differ in both the range of values permitted and the entry resolution; the present values are shown in the number prompt. Pressing the ***Range*** soft-key opens the range selection menu, with the presently active range highlighted. The selection can be changed using either the ▲ or ▼ soft-keys or the knob. Pressing the ***OK*** soft-key implements the new selection. Changing the range requires the load input to be disabled, which will be done automatically if not already done by the user. Alternatively pressing the ***Cancel*** soft-key leaves the range unchanged. Changing from a high resolution range to a low resolution range may result in the truncation of the set level. If the range is changed and the set level value exceeds the limits for the new range, the value is updated to the maximum or minimum of the new range. Press the ***Back*** soft-key to return to the battery test menu.

A separate cut-off voltage that is totally independent from the dropout voltage can be set that will guarantee to disable the load input as soon as the sensed voltage drops below the cut-off voltage level. Pressing the ***Cut-Off*** soft-key on the home screen opens the Cut-Off Voltage setting prompt. In the usual way this displays the present Cut-Off Voltage setting, the range in which the new value can be set, and the maximum resolution of the setting. After entry of the number press either the ***mV*** or ***V*** soft-key to implement the setting. Press the ***Back*** soft-key to return to the battery test menu.

It is advised that the dropout voltage is set to zero whilst using the battery discharge feature.

Pressing the ***Run*** soft-key starts the discharge test by enabling the input and initiating the timer and capacity meters. The live reading of elapsed test (discharge) time is shown on the display, allowing up to 100 hours with 1 sec resolution.

The ***Stop*** soft-key stops the test by disabling the load input and pausing the timer and capacity meters. The test can then be resumed by pressing the ***Run*** soft-key once more. Alternatively pressing the ***Reset*** soft-key will reset the timer and capacity meters. If the sensed voltage drops below the cut-off voltage level whilst the test is running then the test will be stopped, the load input will be disabled and the timer and capacity meters will be paused.

Voltage and Current Limits

These limits specify values of source voltage and load current which will cause the load to automatically disable its input if the actual measured voltage or current exceeds the set limit. This is not an independent hardware trip, but a simple comparison against the meter measurements.

To access the Limits menu, press the ***Limits*** soft-key on the home screen. This menu also gives access to the facility which allows the unit to dissipate up to 600 Watts under intermittent operation, which is described below.

The ***V / I*** soft-key toggles the menu between setting up the two limits, allowing a numeric value for each to be entered in the usual way. Pressing the ***None*** soft-key (or entering a value of zero) disables that particular limit. Press the ***Back*** soft-key or the **Home** key to return to the home screen.

While a value is specified for either limit, **Lim** appears on the status line of the display. Then, if either of the limits is exceeded a fault message is displayed and the load input is disabled.

Short Term or Intermittent Operation at up to 600 Watts

For situations where the load is only required for short term or intermittent testing of a source, it is possible for the unit to dissipate up to 600W subject to time and duty cycle limitations.

To enter this mode of operation press the ***Limits*** soft-key on the home screen and then press the ***600W*** soft-key. A warning message is displayed outlining the limitations described here. Press the ***Confirm*** soft-key to accept the warning and enter the high dissipation mode. The fan will run at full speed for as long as this mode is enabled. Press the ***Back*** soft-key to return to the home screen.

In the **METERS** panel of the home screen, below the calculated power value, the display now shows a read-out of percentage of the permitted accumulated energy limit. This is calculated from the product of actual power dissipation and elapsed time and is an indication of the temperature stress being imposed on the power stage of the load. When this value reaches 100% a warning message is shown on the screen. To avoid unexpected behaviour the load input is not immediately disabled, however the user must either manually switch off the source or the load, or at least reduce the dissipation by switching to a lower level setting, otherwise the load will automatically disable its input ten seconds after the warning is shown. If this trip is allowed to occur then the input cannot be re-enabled for 60 seconds.

Once the high power condition is removed (or set to a low level) the percentage of limit count will decrease, giving the user an indication of when it is safe to return to high power operation. Provided the fault trip did not occur, it is possible to re-enable the input without waiting for the value to return fully to zero, but the subsequent period of high power operation will be correspondingly reduced.

This mode is primarily intended for use in situations where periods of high power operation for up to about one minute are interspersed with periods at zero power for at least twice as long. However it is also possible to configure transient operation between a high power condition and a much lower power condition, subject to limitations on the repetition rate. Whilst in this mode, the transient oscillator Frequency is limited to 1Hz or less, and the Slew Rate is limited to 0·1% of the maximum available in normal operation. Within these restrictions the load can be set up as required; if the average power is less than 200 Watts then the thermal duty cycle limitation is satisfied and the configuration can be used continuously.

Important: it should be recognised that significantly exceeding the recommended duty cycle can raise the junction temperatures of the power FETs beyond their rating and possibly reduce their lifetime. Also, repeated rapid changes in dissipation can result in stress fatigue of both the bond wires and the junction to mounting base interface, so avoid using external voltage control to implement large dissipation changes at high frequencies. Successful use of this 600 Watt capability requires the user to exercise a reasonable degree of caution.

To return to normal operation, access the ***Limits*** menu again and press the ***400W*** soft-key.

Store and Recall Facilities

The instrument is able to store and recall up to 30 user defined sets of load parameters in non-volatile memory. Each memory location holds all the parameter settings – load Mode, active level, Level A value, Level B value, Dropout Voltage level, transient Frequency, Duty and Slew Rate, the state of Slow start and the state of the 600 Watt option.

Both the store and recall menus display a preview of the parameters that are already stored within each memory location. If a memory location is empty then (**---**) is displayed. A memory location can be selected either by using the ▲ or ▼ soft-keys or the knob to step through the locations in sequence, or by entering the location number directly using the numeric keypad (with a leading zero if required). The currently selected memory location number (and user-specified name) is highlighted on the display, and the location number is also displayed above the table of previewed parameters (this copy of the location number also updates during numeric entry).

Note: the store and recall menus look almost identical, see the menu name in the top left corner to distinguish between the two.

Store Menu

To access the Store menu, press the ***Store*** soft-key on the home screen. There are three available options that can be applied to each memory location – store the present settings to the memory location, delete the contents of the memory location and rename the memory location.

To store the present load configuration and settings to a memory location, select the desired location and then press either the ***Confirm*** soft-key (if the location is presently empty) or the ***Replace*** soft-key to overwrite the existing contents. Once stored, the parameters will be shown in the preview table. If the location was empty prior to the store operation, then the location will initially be given a default name of **Store_nn**, where **nn** is the location number.

To rename a memory location, press the ***Rename*** soft-key which opens the character entry screen. Select a character using the knob, or alternatively the digits 0 to 9 and the decimal point can be entered using the numeric keys. To enter the selected character, press the ***Enter*** soft-key. To delete the previously entered character press either the ***CE*** soft-key or the CE hard-key.

Use the ◄ and ► soft-keys to select the character position. The maximum number of characters in a memory location name is limited to 10. Upon completion of the character string entry, press the ***Confirm*** soft-key to accept the changes and return to the store menu where the memory location name will automatically be updated. Alternatively press the ***Cancel*** soft-key to reject any changes and leave the memory location name unchanged.

To delete the contents of a memory location, select the desired location and press the ***Delete*** soft-key. **Delete** will then be shown in the top left corner of the display and the soft-keys will list the options of either ***Cancel*** (cancel the deletion) or ***Confirm*** (confirm that the location contents are to be deleted). The contents of the memory location are not erased until the ***Confirm*** soft-key is pressed. Pressing the ***Cancel*** soft-key will return to the store menu without deleting the contents of the memory location. As soon as the deletion is confirmed the load parameters and location name will be replaced with (**---**).

Recall Menu

To access the Recall menu, press the ***Recall*** soft-key on the home screen. To recall the load parameters from a memory location, select the desired memory location using the ▲ or ▼ soft-keys or the knob, and then press the ***Confirm*** soft-key. The instrument will then return directly to the home screen with all the recalled load parameters updated, but the load input will be disabled to avoid unexpected results. Alternatively press the ***Back*** soft-key or **Home** key to return to the home screen without recalling the stored load parameters.

If it is required to recall a set-up which was stored when 600 Watt mode was active, then the unit must be set into the 600 Watt mode from the ***Limits*** menu (including acknowledging the warning message) before entering the ***Recall*** menu.

Utilities Menu

Pressing the ***Utilities*** soft-key on the home screen gives access to four sub-menus to configure various instrument settings and preferences. Instruments fitted with Digital Remote Control interfaces have a fifth sub-menu. The selection can be made using either the ▲ or ▼ soft-keys or the knob. Press the ***OK*** soft-key to initiate the selection and enter the sub-menu, or press the ***Back*** soft-key or the **Home** key to return to the home screen.

Optional Settings

There are two preferences that can be changed: the state of the input enable at power up and whether the buzzer is enabled. Each preference has two mutually exclusive options, with the active selection indicated by a ✓. Select the required option using either the ▲ or ▼ soft-keys or the knob and press the ***Confirm*** soft-key to initiate the selection.

Reset to Factory Defaults

Selecting this sub-menu opens a further sub-menu to determine whether to reset just the present load configuration and parameters (which is useful if a problem is encountered), or just to clear the contents of every store and recall memory location, or to reset everything.

Proceed with caution before confirming as this process cannot be undone. Press the ***Confirm*** soft-key to accept the reset and return to the utilities menu. Alternatively, to abandon the reset, press either the ***Cancel*** soft-key to return to the utilities menu or the **Home** key to return directly to the home screen.

The default settings (which are also set by the *RST remote command) are:

Load Mode:	Constant Current, 80 Amp range.
Level A & Level B:	Zero for all modes, except maximum resistance for CR mode.
Dropout Voltage:	0V.
Slow Start:	Off.
Transient generator:	1 Hz at 50% duty cycle.
Slew rate:	The Default setting for best calibration of the Level settings.
Protection Limits:	Set to None.

Screen Contrast Adjustment

This sub-menu offers the choice of white-on-black or black-on-white display by using the ***Invert*** soft-key. The screen contrast setting then allows the display to be optimised for viewing angle and ambient temperature. Use the knob to change the setting, watching the screen preview. Press ***Confirm*** to retain the new settings or ***Cancel*** to revert to the previous settings and return to the Utilities menu, or **Home** to revert and return directly to the home screen.

Calibration

The calibration menu allows for the existing calibration settings to be adjusted and should only be carried out by qualified personnel with access to the necessary calibrated test equipment. Entry to the calibration menu requires a password which is published in the Service Guide, along with details of the calibration procedure. Please contact your supplier if you require a copy.

Interface Settings

The interface settings menu only appears on the programmable version of the instrument. It allows the setting of the optional GPIB address and gives an overview of the LAN connection status and shows the IP address obtained by the unit once the connection is established.

The optional GPIB address can be adjusted by using the knob and can be set to any value between 0 and 30 but must be unique on the bus. The unit does not offer a Listen Only capability. The address is only changed when the ***Confirm*** soft-key is pressed; alternatively, the address can be left at its previous value by pressing the ***Cancel*** soft-key.

Analogue Remote Control

Two forms of voltage controlled remote operation are available: External Voltage Control, where an analogue voltage fully defines the demanded level of the chosen operating mode, and External TTL Control where an external logic voltage selects between the two levels set as Level A and Level B. The same rear panel control voltage input is used for both of these modes.

The controlling voltage is applied to the two CONTROL VOLTAGE terminals on the rear panel. Each terminal has an input impedance of nominally 400kΩ to the load negative terminal. A differential line receiver allows common mode voltages up to ±100 Volts. The common mode rejection is better than –66dB (50mV at 100V); although it is typically much better than this (-80dB), the effect on the programmed level can be significant. Consideration should also be given to the return path for the input currents.

Pressing the ***Extern*** soft-key on the home screen opens the external selection menu, where either the knob or the ▲ and ▼ soft-keys can be used to highlight the desired external control method. Pressing the ***Enable*** soft-key switches to the highlighted method; alternatively pressing either the ***Back*** soft-key or **Home** key returns the instrument to the home screen leaving the level select unchanged.

To return from external to internal control, use one of the three LEVEL SELECT keys.

Remote Voltage Control

When External Voltage Control is enabled, the **Ext** lamp will illuminate and **Ext V** will be displayed in the status line. The internal Level A and Level B parameters no longer have any effect. The load mode and full scale range can still be changed in the usual way if required. The Dropout Voltage setting remains active, if it is set above zero.

The CONTROL VOLTAGE input has a scaling factor of 4 Volts full-scale. The conversion factors for each mode and range are:

Operating Range	Scale Factor
80 Amps	20 Amps per Volt
8 Amps	2 Amps per Volt
80 Volts	20 Volts per Volt
8 Volts	2 Volts per Volt
400 or 600 Watts	150 Watts per Volt
400 Ohms	100 Ohms per Volt
10 Ohms	2·5 Ohms per Volt
1 A/V (Siemens)	0·25 A/V (Siemens) per Volt
40 A/V (Siemens)	10 A/V (Siemens) per Volt

The slew rate circuit and setting remains in circuit and the required transient wave shape can be obtained by adjusting these settings in combination with the shape of the signal applied to the remote input, subject to the transition time limitations of the load circuit.

Remote Level Select

When External TTL Control is enabled, the **Ext** lamp will illuminate and **Ext TTL** will be displayed in the status line. If the external signal applied to the CONTROL VOLTAGE input is below the logic threshold (nominally + 1·5 V) then the level set by the Level A control is active; if the signal is above the threshold then the level set by the Level B control applies. Any logic signal (TTL or other) which crosses the 1·5V threshold is satisfactory. The transitions are defined by the setting of the slew rate. All parameters can be changed as required in the usual way.

Application Notes

This chapter is intended to give helpful information concerning practical applications of the unit. All electronic loads are subject to the impact of source characteristics, interconnection inductance and feedback loop characteristics, which can give rise to unexpected instability or poor dynamic behaviour. The information given here will assist in understanding the factors involved. The initial sections below cover general considerations, while later sections provide greater detail on the particular characteristics of each operating mode.

Grounding the Current Monitor Output

A scope will often be used to view the voltage and current waveforms, particularly when using the transient capabilities of the load to investigate the behaviour of a source. Take care to select a suitable point to connect the scope ground, as voltage drops on the interconnecting cables (particularly transients caused by inductance) can give misleading results. The Current Monitor Output from the load is designed to avoid multiple grounds, as it provides common mode rejection for differences from the load negative terminal up to a few volts. The negative terminal of the current monitor must be connected to the load input negative terminal somewhere in the circuit. If there is already another ground connection, then use that same point, otherwise the best ground point is usually the negative terminal of the source.

Note that if the load is used with a source having the positive terminal grounded, then any instrument attached to the Current Monitor negative terminal (and therefore also to the load circuit negative) **must** be fully floating, to avoid grounding both terminals of the source.

Sources

Batteries are a low impedance source and, apart from the possibility of inductance in the interconnecting leads, they are generally easy to use in conjunction with an electronic load. The dropout facility should be used to protect batteries from being damaged by excessive discharge.

Electronic supplies have active feedback networks whose dynamic characteristics often interact with the load. When that load (like this instrument) also includes an active feedback controlled network, whose dynamic characteristics in turn depend on the nature of the source, it will be apparent that the behaviour of the resulting system can be impossible to predict.

Source resistance

If a source has significant resistance (including the resistance of the connecting leads), so that the voltage falls as the current rises, it is important to ensure that the voltage across the load terminals remains at all times above the minimum permissible operating voltage.

The particular considerations concerning source resistance which apply in Constant Power mode are discussed in the section covering that mode below.

Source inductance

Source and interconnection inductance has a major impact on the behaviour of the load: the fundamental characteristic of an inductance is that it generates an emf to oppose any change in current. As the current rises, the emf generated by the inductance reduces the voltage across the load terminals, perhaps to the point where the load saturates. Whenever the voltage falls below about 3V the transconductance of the power stage changes considerably; this changes the damping factor of the feedback loop and alters its dynamic behaviour, possibly giving rise to overshoots or even oscillation.

Whenever the load current falls, the inductor will generate a voltage transient which might exceed the voltage rating of the load. The unit is fitted with varistors designed to absorb non-repetitive transients up to 80 Joules, but repetitive energy up to only 2 watts. Even if the overvoltage detector disables the load input, these varistors remain connected, so if either of those energy limits is likely to be exceeded then some form of external protection must be added, such as a catching diode across the inductor in the source.

Shunt capacitance

The load can only sink current, so it can only pull the voltage at its terminals down. The source must pull the voltage up, including providing charging current to any capacitance across the terminals. If the total current available is more than sufficient to charge this capacitance at the slew rate required, then the load will continue to conduct the excess current during the transition and the behaviour will be as expected. However, if the source cannot charge the capacitor at the required slew rate, then the load will cut-off until the final voltage is reached. There will then be an overshoot as it starts to conduct, followed by a ringing as the source responds.

Stability of Source and Load Combinations

This instrument is optimised for accuracy under constant load conditions by using a high gain feedback loop. Because of this, the possibility exists for combinations of source, interconnection and load characteristics to give rise to instability. There are three major potential causes: inductance in the wiring between source and load (or an inductive output impedance of the source), capacitance in parallel with the connection between source and load (including an output capacitor within the source) and the characteristics of active feedback circuits within the source.

In Constant Power, Conductance and Resistance modes, the system includes an analogue multiplier used by the load to derive the current requirement from the instantaneous voltage. This reduces the bandwidth of the loop and adds additional phase shift. In general, Constant Current mode is the most likely to be stable, but in some cases instability can be avoided by using a different mode. The conditions that affect the dynamic behaviour of the load in transient operation also lead to instability, and some of the suggestions in the sections below may be found helpful.

Constant voltage mode operates in a completely different way, by integrating the voltage error to create a value for the current demand. This results in a system with extremely high gain and significant potential for instability.

Many supplies have L-C output filters to reduce noise; these introduce extra phase shift into the overall source and load combination and can increase the possibility of instability. If there is no damping across the inductor, a resonant circuit can be formed which allows oscillations to build up to significant amplitude.

Remedial Actions

The compensation networks of the power stages in the load are changed when the Slew Rate is set to less than 0.001 times the maximum slew rate for the given load mode and range. For example if constant current mode is selected and set to its high settings range (up to 80A), the maximum slew rate setting is 2.5A/us, hence the compensation networks are changed at slew rates settings below 2.5A/ms. Even if the transient facilities are not being used, this change in compensation reduces the bandwidth and may make the source and load combination stable.

If instability arises, observe the voltage waveform across the load with a scope: if at any point the voltage rises above the open circuit emf of the source, then there must be an inductive element present to form a resonant circuit. Some means must be found to insert damping into this circuit. One technique is to use a network consisting of a capacitor and a resistor in series (sometimes called a Zobel network), across the input terminals of the load. Many electronic loads have such a network built-in; it is omitted from this load to maximise its versatility by offering the lowest possible input capacitance. It can be added externally: values around 2·2μF and 5Ω are common, but note that this must be a non-inductive power resistor capable of dissipating a few watts. A flat film type is best – wire wound resistors are not suitable.

Dynamic Behaviour in Transient Operation

When the transient capabilities of the load are used, the dynamic behaviour of the source and load combination during the transitions depends on similar considerations to those affecting stability: series inductance, shunt capacitance and feedback loop characteristics. Proper operation depends on the load neither saturating nor cutting off at any point in the cycle. The faster the slew rate sought, the more likely it is that aberrations will occur on the transitions.

Because of changes in the transconductance of the FETs, the dynamic behaviour of the power stages changes at both low and high currents, and also at low voltages when the inter-electrode capacitance increases considerably. In general, behaviour is optimum in the middle of the current range (5 to 60 Amps) and at voltages between about 3 volts and (if there is significant source impedance) about 3 volts below the open circuit voltage of the source.

Attempting to achieve a slew rate beyond the capabilities of a source and load combination can result in substantial overshoot and ringing. Reducing the slew rate, sometimes by just a small amount, will often improve the response considerably.

Source Characteristics

The purpose of transient testing is to examine the behaviour of any feedback loops within the source. If the response of the source is under-damped, then in general the use of an active load will accentuate the effect. This is particularly true in the modes where the load responds to changes in voltage. At particular transient frequencies (particularly higher frequencies) the load may excite resonances in L-C filters or match the natural frequency of a feedback loop. This can result in considerable reaction from the source, possibly to the extent of causing damage.

Mechanical generators have substantial inductance, mechanical inertia and slow response times. Transient response testing of such sources should only be attempted at low slew rates.

Start-up transients

There are two different start-up conditions to consider depending on whether the source or the load is switched on first.

If the source is switched on first and the load enabled afterwards then the start-up may have a small transient, but this will not generally exceed the magnitude of the Level setting, except at very low current settings (below a few Amps). This transient can be controlled by selecting Slow Start and setting a gentle Slew Rate.

In the other case, when the load is enabled before the source is switched on, much larger transients can be generated. The reason for this is that as soon as the load is enabled the internal feedback loop will attempt to conduct the current demanded by the level setting. In the absence of a source voltage this will result in the gate drivers applying maximum bias voltage to the power FETs, reducing their resistance to minimum (<25mΩ) in an attempt to force a current to flow. This is the condition that produces the **Low Voltage** warning on the status line of the display. When the source is switched on and starts to produce a voltage it will initially see this 25mΩ load, which will cause a significant current transient until the feedback loop has time to respond and reduce the bias on the FETs. There are two means to reduce this. One is to use the Slow Start facility with a non-zero setting of the Dropout Voltage to ensure that the load does not attempt to conduct until the source voltage is present, and then set the Slew Rate to control the initial transient. The second is to use Constant Resistance (CR) mode, when zero source voltage should cause zero current to flow. Because of the tolerance on internal offset voltages it may be necessary to set the Dropout Voltage to a small value (a few tens of mV) to ensure that the unit does not enter the **Low Voltage** saturation condition (the yellow lamp also indicates this).

If it is desired to test the start-up behaviour of a power supply, the best approach is to use a small auxiliary supply to pre-bias the load into conduction, together with series isolating diodes to cause the load current to transfer from this bias supply to the supply under test when it starts to produce its output voltage.

Characteristics of each Operating Mode

The following sections give a brief description of the way each mode is implemented, and give some guidance of the effect that has on the application of the load.

The unit has two power stages (each a large FET) in parallel. Local current feedback around each stage ensures equal power sharing, with overall current feedback to an earlier stage used to enhance accuracy. This architecture provides fundamentally a constant current sink. Ideally the operation of the power stages would be independent of the applied voltage, but in practice, both

the gain and the inter-electrode capacitance of the FETs vary with operating point, particularly at low voltages (below about 3V) and at either low or high currents. This results in slower response and different stability conditions and dynamic behaviour in these regions, whatever the operating mode.

The other operating modes first derive the current required according to the instantaneous source voltage applied and then use the power stages to conduct that current.

Constant Current Mode

As described above, this is the fundamental operating mode of the power stages of this instrument, so it has the simplest feedback loop and the widest bandwidth. The sensed voltage signal is only used for the meters and protection. Constant current mode is normally used in conjunction with low impedance power supplies, and will be quite stable unless there is significant inductance in either the interconnections or the source. Because of the wider bandwidth it is particularly critical to have low inductance connections in this mode.

Note that the load cannot be used in constant current mode to test a constant current power supply, as this combination has only two stable conditions: if the load setting is below the supply limit then the supply will not be in constant current operation and will deliver its maximum output voltage, whereas if the load setting is above the limit of the supply then the load will saturate at its minimum operating resistance with the supply delivering its designed current. The best way to test a constant current supply is to use the load in constant resistance mode, with a suitable setting of the Dropout Voltage offset, as described below.

Constant Power Mode

Constant Power mode is implemented by using an analogue divider to divide the specified power setting by the actual sensed voltage to calculate the necessary current. The power stages then adjust their conductivity in order to obtain this current. If the source voltage falls then the load will seek to keep the same power level by reducing its resistance to raise the current. The fact that the current rises as the voltage falls means that the load is acting as a negative resistance. This behaviour is also exhibited by most switch-mode power supply circuits.

This characteristic raises the possibility of a latch-up condition if the source has a significant output impedance. To explain this, consider the possibility that the source voltage falls slightly (perhaps because of noise) – the load responds by increasing the current to maintain the power level. This causes a further reduction in the terminal voltage of the source (because of its internal impedance), so the increase in power is less than expected. The load responds to this by reducing its resistance even more, in an attempt to increase the current and obtain the required power. A cross-over point is reached when the fall in voltage outweighs the increase in current and the load cannot draw the required power. This leads to the latch-up condition, with the load at its minimum resistance (nearly a short-circuit), the voltage across it almost zero, and the source is delivering its maximum current into the almost short-circuit load. The status line of the display will be showing the **Low Voltage** warning.

If the source impedance is purely resistive then this condition will be triggered when the source terminal voltage falls to half its open circuit voltage (this is the maximum power transfer condition of classical electrical theory). More commonly, it will also be triggered immediately if the source reaches a current limit, or enters constant current operation.

The only way to recover from this situation is to disable either the load input or the source output.

The vast majority of electronic sources will start in a current and power limited state at power-up, so, to avoid immediately entering the latch-up condition, it is necessary to use the slow start facilities of the load to constrain the power demand while the source builds up its output voltage.

As Constant Power mode has the characteristics of a negative resistance, the possibility always exists of forming a negative resistance oscillator in combination with the output impedance of the source. In practice, constant power mode normally operates well in conjunction with sources designed to supply such a load.

In transient operation, if the source is constant voltage (with low source impedance), then the current will follow the changes in power demand and the response will be very similar to constant current mode. If the source voltage falls as the power demand increases, then (as described above) the current has to increase more than proportionally and the current slew rate rises; this will limit the maximum useful power slew rate.

Constant Conductance and Resistance Modes

In both these modes, the analogue multiplier-divider is used to derive the current required from the sensed voltage. In Conductance mode the current required is calculated by multiplying the sensed voltage by the specified conductance; in Resistance mode the current required is calculated by dividing the difference between the sensed voltage and the dropout voltage setting by the specified resistance.

In both cases, the current rises as the applied voltage rises. At equivalent resistance and conductance settings, the path from the voltage sense input through to the power stage is the same, so the two modes will exhibit similar stability characteristics.

In transient operation, the two modes are very different. In Conductance mode, the current required linearly follows the changing conductance value and the behaviour is fundamentally similar to constant current mode. In Resistance mode, the required current is inversely proportional to the linearly changing resistance value, so the resulting current waveform is very non-linear, changing rapidly at the low resistance part of the cycle. This rapid change accentuates the effect of inductance in the interconnecting leads and can easily lead to bottoming and overshoots. Resistance mode is best used at higher voltages and modest currents.

Dropout Voltage and Resistance Mode

The use of the Dropout voltage setting as an offset in Constant Resistance mode allows flexibility in constructing load characteristics for particular circumstances. For example, setting a low value of resistance and a significant value of dropout voltage yields a characteristic similar to a string of LEDs or a Zener diode and provides an alternative to Constant Voltage mode (see below) but without the extreme stability problems of that mode.

Constant Voltage Mode

Constant Voltage mode is more likely to exhibit instability than any other mode, especially when used in conjunction with electronically regulated sources. It is primarily useful with true wideband current sources which maintain their high output impedance at all frequencies. It will also operate satisfactorily with resistive sources of moderate impedance, such as photovoltaic cells.

The behaviour required in Constant Voltage mode is the opposite of the fundamental operation of the power stages of the load, which are intrinsically a voltage independent current sink, so it is implemented in an entirely different manner to all other modes. The difference between the sensed voltage and the required voltage is applied to an integrator with a short time constant. The output of this integrator (which is, in effect, a guess at the current required) drives the power stages. The operation of this mode therefore depends entirely on feedback action.

The presence of the integrator means that the low frequency transconductance of the load (the change in load current caused by a small change in sensed voltage) is very high: many thousands of Amps per Volt. This combines with the output resistance of the source to produce a system with extremely high loop gain. High frequency instability can result in the normal way if the phase shift around the loop reaches the threshold for oscillation before the gain has rolled off below unity. Generally such oscillations will be roughly sinusoidal, at a frequency of many kHz. The addition of a series CR (Zobel) network across the load, as discussed above, may eliminate such instability. Alternatively, series resistance between source and load might be helpful.

A more common instability arises from the transient behaviour of the source. The simplest visualisation of this is to start with the load suddenly increasing its current (perhaps because the source voltage has just risen above the set point). This increase in current causes a transient reduction of the output voltage of the source (depending on its transient response) which causes the voltage to fall below the setting of the load, which in response ceases to conduct current. This in turn results in a transient increase in the output voltage of the supply, and then the process

repeats. This type of instability can be recognised by the characteristic short pulses of current separated by longer periods of zero current. Sometimes this instability can be avoided by setting the load threshold well below the open circuit output voltage of the source. Adding resistance in the connection between source and load may also be helpful.

Another possible form of oscillation can arise if the source has a large output capacitor; this is characterised by a sawtooth voltage waveform, and is often called a relaxation oscillation.

The operation of the Slow Start circuit is modified in Constant Voltage mode to implement one common technique to avoid triggering instability. When the load is initially enabled with Slow Start active, its effective voltage setting starts at 80V (which should be above the open circuit voltage of the attached source) so no current flows. The slow start circuit progressively reduces the voltage setting (as determined by the configured Slew Rate). No current flows until the setting falls past the output voltage of the source. Depending on the output resistance of the source the current will then gradually increase until the source has been pulled down to the final voltage setting and the slow start circuit no longer has any effect, leaving stable operation at the desired operating point.

If Constant Voltage mode cannot be made stable, it is possible to use the offsetting capability of Constant Resistance mode as described above. The Dropout voltage level is set to just below the required voltage and the resistance level setting is used to define the slope resistance. Even quite small values of resistance setting will reduce the gain far below that of voltage mode and allow stable operation to be obtained.

Multiple Unit Operation

It is possible to operate two loads in parallel in Constant Current mode, which will double both the current handling and power dissipation capability of a single unit. The connections to the source should be matched as well as possible.

Note that additional stability issues may arise, because of phase response differences between the units; the use of more than two units in parallel is not recommended. Multiple unit operation should not be attempted in any operating mode other than Constant Current.

Zero Volt Operation

Although this unit is designed with very low internal resistance (less than 25mΩ) to enable operation down to low voltages at high currents, there are occasions when a load is needed capable of conducting the full current down to zero voltage. This can be achieved by connecting an additional voltage supply in series with the source under test to boost the voltage at the input to the load. It is strongly recommended that a diode should also be included (in series) in the circuit, to ensure that reverse current cannot flow.

The additional supply must be capable of providing the full load current and must have a dynamic performance that does not impair the stability of the combination. If possible, the use of batteries is recommended, but note that the direction of the current discharges the battery, so care must be taken to avoid full discharge.

External voltage sensing must be used, with the sense leads connected to the actual source under test. The additional supply must provide a voltage of at least the minimum operating voltage of the load (at the current concerned), plus any voltage drop in the inter-connections, but the maximum voltage permitted by the external sense circuit is 6 Volts.

Note that if the circuit does not include the series diode recommended, then it is possible for the combination of the additional supply and the load (in a low impedance condition) to apply a reverse voltage to the source under test. It is strongly recommended that a switch, capable of disconnecting the full load current, should be included in the circuit.

⚠ The load has a diode across the input terminals that will conduct current if reverse polarity is applied to the load, even if the load input is disabled.

Remote Interface Configuration

The LD400P model can be remotely controlled via its RS232, USB, optional GPIB or LAN interfaces.

The optional GPIB interface provides full facilities as described in IEEE Std. 488 parts 1 and 2.

The RS232 interface communicates directly with a standard COM port.

The USB interface enumerates as a Communications Class device and interacts with application software through a standard virtual COM port device driver on the PC. The instrument firmware can be updated in the field via the USB port; see the 'Maintenance' chapter for details.

The LAN interface is designed to meet LXI (Lan eXtensions for Instrumentation) version 1.4 LXI Core 2011. Remote control using the LAN interface is possible using the TCP/IP Sockets protocol. The instrument also contains a basic Web server which provides information on the unit and allows it to be configured from a web browser. Simple command line control from the browser is also possible.

GPIB Interface (optional)

The standard GPIB interface 24-way connector is located on the instrument rear panel. The pin connections are as specified in IEEE Std. 488.1-1987 and the instrument complies with both IEEE Std. 488.1-1987 and IEEE Std. 488.2-1987.

It provides full talker, listener, service request, serial poll and parallel poll capabilities. There are no device trigger or controller capabilities. The IEEE Std.488.1 interface subsets provided are:

SH1, AH1, T6, L4, SR1, RL2, PP1, DC1, DT0, C0, E2.

The GPIB address of the unit is set from the front panel: from the Home screen select the ***Utilities*** menu then ***Interface Settings***. The present GPIB address is displayed. If it needs to be changed, use the rotary knob to set the desired address and then press the ***Confirm*** soft-key.

The interface will operate with any commercial GPIB interface card, using the device drivers and support software provided by the manufacturer of that card.

RS232 Interface

The 9-way D-type serial interface connector is located on the instrument rear panel. It should be connected to a standard PC port preferably using a fully wired 9-way 1:1 male-female cable without any cross-over connections. Alternatively, a 3-way cable can be used, connecting only pins 2, 3 and 5 to the PC, but with links made in the connector at the PC end between pins 1, 4 and 6 and between pins 7 and 8, as shown in the diagram:

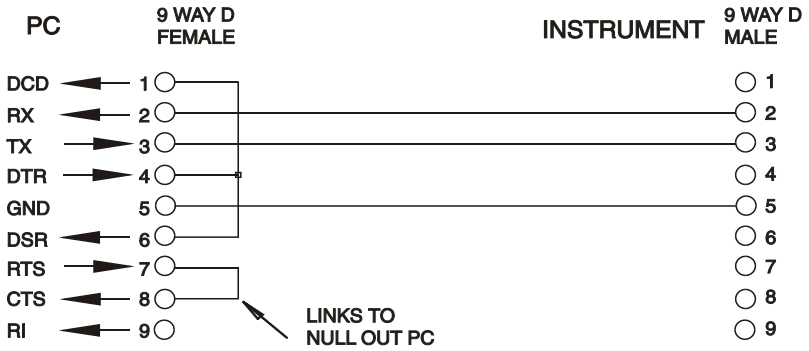

Most commercial cables provide these connections.

In addition to the transmit and receive data lines, the instrument passively asserts pins 1 (DCD) and 6 (DSR), actively drives pin 8 (CTS) and monitors pin 4 (DTR) from the PC. This allows the use of a fully wired 9-way cable.

The Baud Rate for this instrument is fixed at 9600; the other parameters are 8 data bits, no parity and one stop bit. Flow control uses the XON/XOFF protocol, but because of the low volume of data associated with this instrument it is very unlikely that flow control will actually be invoked.

USB Interface and Device Driver Installation

The instrument firmware can be updated in the field through the USB port. This does **not** need the driver described here. It requires a PC software utility provided by the manufacturer, and uses a HID driver that will already be installed on the PC. If that is the only USB functionality required, download the package containing the firmware update together with the PC utility from the manufacturer, and follow the instructions included.

Using the USB interface for remote control requires a Communications Device Class driver on the PC to provide a virtual COM port instance. In Windows a suitable driver is provided by Microsoft, but it is not installed by default. The data (.INF) file to control the installation is provided on the Aim TTi website; however the same driver is also used by many other instruments from this manufacturer and may already be known to the PC.

To install the driver for the first time, first switch the unit on, and then connect the USB port to the PC. The Windows plug and play functions should automatically recognise the attachment of new hardware to the USB interface and (possibly after searching the internet for some time) prompt for the location of a suitable driver. The driver can be found on the support page of the Aim TTi website: www.aimtti.com/support . The file is named USB_ARM_VCP_xxx.INF, where xxx is a version number. (A readme.pdf file will also be found in that directory if further assistance is needed.)

In some cases Windows will not complete this procedure (especially recent versions which search the internet first, looking for the unique Vendor ID and Product ID), in which case the instrument will show in Device Manager as “not working properly”. If this happens, select this device, right click and choose “update driver software...” and then “browse this computer for driver software...” and then locate the .INF file on the website as described above.

Once Windows has installed the device driver it will assign a COM port number to this particular unit. This number will depend on previous COM port assignments on this PC, and it may be necessary to use Device Manager to discover it. Each instrument has a unique USB identifier which is remembered by the system, so it will receive the same COM port number whenever it is attached to the same PC (regardless of the physical interface socket used), even though the COM port will disappear while the instrument is disconnected or switched off. Other instruments will receive different COM port numbers.

Note that a different PC will not necessarily assign the same COM port number to a particular instrument (it depends on the history of installations), however Device Manager can be used to change the assignments given.

This virtual COM port can be driven by Windows applications (including a terminal emulator) in exactly the same way as any standard COM port, except that the Baud rate and other settings are unnecessary and are ignored. Some old applications might not function with COM port numbers 3 or 4, or above 9. In this case, use Device Manager to change the allocation given. Once it is installed, the driver will be maintained by Windows Update in the usual way.

LAN Interface

The LAN interface is designed to comply with the LXI standard version 1.4 LXI Core 2011 and contains the interfaces and protocols described below. For more information on LXI standards refer to www.lxistandard.org .

When powered up and attached to a network, the unit will by default attempt to obtain IP address and netmask settings via DHCP, or, if DHCP times out (after 30 seconds), via Auto-IP. In the very unlikely event that an Auto-IP address cannot be found a static IP address is assigned; the default is 192.168.0.100, but this can be changed on the web page. Connecting via a router is recommended as this is significantly quicker to assign an IP address; connecting directly to a PC will only begin to assign an Auto-IP address after the 30 second DHCP timeout.

Since it is possible to misconfigure the LAN interface, making it impossible to communicate with the instrument over LAN, a LAN Configuration Initialise (LCI) mechanism is provided via a push switch (marked **LAN reset)** accessible through a small hole in the rear panel. This restores the default configuration with DHCP enabled, so the unit will then follow the sequence described in the previous paragraph. Note that resetting the LAN interface removes any password protection.

The progress of establishing a LAN connection can be viewed either by inspecting the Interface Settings menu (from the home screen press ***Utilities*** then ***Interface Settings***) or by interpreting the symbol shown on the status line of the home screen, which has four possible indications:

No LAN	If the unit cannot detect any connection to a LAN, e.g. the cable is unplugged, then the LAN status indicator is .
Configuring	The unit has detected a LAN connection but is not yet configured, e.g. is waiting for DHCP. The LAN status indicator is animated, flashing between and
LAN OK	The LAN connection is now configured and the unit can communicate. The display becomes
LAN FAULT	The unit has detected a problem with LAN connection, e.g. Its IP address is in use by another device. Communication is not possible and the display shows

LAN IP Address and Hostname

To communicate with the instrument through the LAN interface, the IP address (which was allocated during the connection procedure described above) must be known. Once connected and correctly configured, the IP address of the unit is displayed within the interface settings menu (press **Home**, then select the ***Utilities*** menu then ***Interface Settings***). Alternatively the address can be obtained from the DHCP server, or by using the LXI Discovery Tool described below.

mDNS and DNS-SD Support

The instrument supports these multicast name resolution protocols, which allow a meaningful host name to be assigned to the unit without needing an entry in the database of a central nameserver. The desired hostname can be entered on the webpage (which will have to be accessed by IP address the first time); spaces are not allowed. The name then appears in the **.**local domain (e.g. myLD400.local), if the accessing device is configured to support the protocol (which is the case with most modern PCs). The default name is t followed by the serial number.

ICMP Ping Server

The unit contains an ICMP server allowing the instrument to be ‘pinged’ using its IP address as a basic communication check, or by its host name if name resolution is working.

Web Server and Configuration Password Protection

The unit contains a basic web server. This provides information on the instrument and allows it to be configured. The Configure and Instrument Control pages can be password protected to deter unauthorised changes to the remote operation configuration; the default configuration is ‘no password’. The Configure page itself explains how to set the password. The password can be up to 15 characters long; note that the **User Name should be left blank**. The password and hostname will, however, be reset to the default (no password) if the rear panel LAN reset switch is used to reset all the LAN parameters to their factory default.

LAN Identify

The instrument's main web page has an 'Identify' function which allows the user to send a command to the instrument which causes its display to flash until the command is cancelled.

LXI Discovery Tool

This tool can be used to display the IP addresses and other associated information of all connected devices that comply with the VXI-11 discovery protocol. It is a Windows PC application, which can be found on the Aim TTi website www.aimtti.com/support , that can be installed and run on the controlling PC, with the unit either connected directly to the PC network connector or via a router. Double clicking on any entry in the list of discovered devices will open the PC's web browser and display the Home page of that device. For a later version of the tool

that supports discovery by both VXI-11 and mDNS visit www.lxistandard.org . There are also tools for LAN discovery included as part of the National Instruments Measurement and Automation Explorer package and the Agilent Vee application.

VXI-11 Discovery Protocol

The instrument has very limited support of VXI-11 which is sufficient for the discovery protocol and no more.

It implements a Sun RPC Port-mapper on TCP port 111 and UDP port 111 as defined in RFC1183. The calls supported are:

NULL, GET PORT and DUMP.

On TCP port 1024 a very simple VXI-11 protocol is implemented, sufficient only for instrument discovery. This implements the following calls:

CREATE LINK, DEVICE_WRITE, DEVICE_READ and DESTROY_LINK.

Once a link has been created anything written to the device is ignored and any attempt to read from the device returns the same identification string as the *IDN? query.

VISA Resource Name

Because of the limited support for VXI-11 (Discovery Protocol only), the instrument must be referred to by its raw socket information when used with software packages which communicate using a VISA resource name. For example, an instrument at IP address 192.168.0.100 would normally have a VISA resource name of "TCPIP0::192.168.0.100::inst0::INSTR" but for this instrument the name must be modified to read "TCPIP0::192.168.0.100::9221::SOCKET" where 9221 is the TCP port used by this instrument for control and monitoring, see below.

XML Identification Document URL

As required by the LXI standard, the instrument provides an XML identification document that can be queried via a GET at “http://IPaddress:80/lxi/identification” that conforms to the LXI XSD Schema (available at http://www.lxistandard.org/InstrumentIdentification/1.0) and the W3C XML Schema Standards (http://www.w3.org/XML/Schema). This document describes the instrument. The hostname can be used instead of the IP address if name resolution is working.

TCP Sockets

The instrument uses 2 sockets on TCP port 9221 for instrument control and monitoring. Text commands are sent to this port as defined in ‘Remote Commands’ and any replies are returned via the same port. Any command string must contain one or more complete commands. Multiple commands may be separated with either semicolons “;” or line feeds. No final terminator is required, since the TCP frame implies a terminator, but one may be sent if desired.

Interface Locking

All the remote interfaces are live at all times, to remove any need to select the active interface and to ensure that the LAN interface is always available (as demanded by the LXI standard). To reduce the risk of the instrument being inadvertently under the control of two interfaces at once a simple lock and release mechanism is provided in the instruction set. The lock is automatically released where it is possible to detect disconnection, or when the **Local** key is pressed. Access to the interfaces may also be restricted using the web pages.

Any interface may request to have exclusive control of the instrument by sending an “IFLOCK 1” command. The lock may only be released by sending an “IFLOCK 0” command from the interface instance that currently has the lock, and may be queried from any interface by sending an “IFLOCK?” command. The reply to this query will be “-1” if the lock is owned by another interface instance, “0” if the interface is free and “1” if the lock is owned by the requesting interface instance. Sending any command from an interface without control privileges that attempts to change the instrument status will set bit 4 of the Standard Event Status Register and put 200 into the Execution Error Register to indicate that there are not sufficient privileges for the required action.

Note: it is also possible to configure the privileges for a particular interface to either ‘read only’ or ‘no access’ from the Web page interface.

Status Reporting

The standard status and error reporting model described in IEEE Std. 488.2 was designed for the optional GPIB interface and contains some features intended for use with the Service Request and Parallel Poll hardware capabilities of that interface, and to accommodate its semi-duplex operation. Although those facilities are of little use with other interfaces, this instrument makes the full set of capabilities available to all of the interfaces. A separate set of many of the status and error registers is maintained for each potential interface instance. The GPIB (optional), USB and RS232 interfaces each provide a single instance, while the LAN interface provides three: one for the Web page and one each for the two TCP socket interfaces. Having a separate status model for each interface instance ensures that data does not get lost, as some status query commands (e.g. '*ESR?') clear the contents of a register after reading the present value.

The full set of error and status registers and the individual bits they contain is shown in the Status Model Diagram and described in detail below, but in brief the status is maintained using four primary registers, the Input State Register, the Input Trip Register, the Standard Event Status Register and the Execution Error register. A summary is reported in the Status Byte Register, as selected by three masking registers – the Input State Enable Register, the Input Trip Enable register and the Standard Event Status Enable Register. Two further mask registers, the Service Request Enable register and the Parallel Poll Response Enable register, control operation of the optional GPIB hardware Service Request and Parallel Poll (and the associated **ist** message) respectively. It is recommended that, when controlling the unit through any interface other than optional GPIB, the controller program should simply read the primary status registers directly.

The instrument specific Input State and Input Trip Registers record events related to the electrical function of the load and its interaction with the source under test.

The Standard Event Status Register, supported by the Execution Error and Query Error registers, records events concerned with command parsing and execution, and the flow of commands, queries, and responses across the interface. These are mainly of use during software development, as a production test procedure should never generate any of these errors.

Input State and Input Trip Registers (ISR & ISE and ITR & ITE).

These two registers report electrical conditions that have arisen during the operation of the load. By their nature they are common to all interfaces.

The Input Trip Register reports events that have resulted in the unit unexpectedly disabling the load input.

The Input State Register reports the present state of the power stage of the load in the same way as the green and yellow lamps on the front panel and the status line of the display.

Each of these registers has a summary bit in the Status Byte Register, with an associated Enable Register to determine which, if any, bits contribute to that summary. All these registers are bit fields, where each bit is independent (so more than one may be set simultaneously) and has the significance detailed below.

Input Trip Register (ITR)

Bit 7	**Fault trip:** the input has been disabled by one of the hardware fault detectors.
Bits 6-3	*Not used, permanently 0.*
Bit 2	**Over Current protect:** the input has been disabled because the current exceeded the limit specified by the user.
Bit 1	**Over Voltage protect:** the input has been disabled because the applied voltage exceeded the limit specified by the user.
Bit 0	**Over Power protect:** Set in 600W mode if the permitted power and time limit has been exceeded by more than 10 seconds.

The bits in the Input Trip register are set when the event they report occurs, and then remain set until read by the ITR? query. After the Response Message is sent any bits reporting conditions

that no longer apply will be cleared; any bit reporting a condition that remains true will remain set.

The Input Trip Enable Register provides the mask between the Input Trip Register and the Status Byte Register. If any bit becomes '1' in both registers, then the INTR bit (bit 1) will be set in the Status Byte Register. This enable register is set by the ITE <NRF> command to a value 0 - 255, and read back by the ITE? query (which will always return the value last set by the controller). On power-up the ITE register is set to 0 and ITR is cleared (but bits it contains may be set after initialisation in the unusual case of any of the conditions reported being true).

Input State Register

Bit 7	**Fault condition:** One or more of the hardware detectors is reporting a fault condition. Caused by excess temperature, input voltage, internal to external sense voltage difference, or fan failure.
Bits 6-5	*Not used, permanently 0.*
Bit 4	**Duty cycle protect:** Set in 600W mode if the permitted power and time limit is exceeded. If no action is taken, an Over Power Protect Trip will follow 10 seconds later.
Bit 3	**Voltage below Dropout:** the load is not conducting current because the source voltage is below the dropout voltage setting. Corresponds to the **Dropout** warning in the display.
Bit 2	**Input nonlinearity:** the load is not conducting the current expected because the power limit circuit is restricting it. Corresponds to the **Power Limit** warning in the display.
Bit 1	**Input saturation:** the load cannot conduct the current required because there is insufficient voltage from the source. Corresponds to the **Low Voltage** warning in the display.
Bit 0	**Input Disabled:** Reports the present state of the input enable setting.

The bits in the Input State Register continually reflect the present state of the condition they report. The register can be read by the ISR? query, but this does not change the state of the contents. On power-up it is normally set to 1 (input disabled), unless the power up option on the ***Utilities*** menu has been set to retain the previous state.

The Input Status Enable register provides a mask between the Input Status Register and the Status Byte Register. If any bit becomes '1' in both registers, then the INST bit (bit 0) will be set in the Status Byte Register. This enable register is set by the ISE <NRF> command to a value 0 - 255, and read back by the ISE? query (which will always return the value last set by the controller). On power-up it is set to 0.

Standard Event Status Registers (ESR and ESE)

The Standard Event Status Register is defined by the IEEE Std. 488.2 GPIB standard (optional). It is a bit field, where each bit is independent and has the following significance:

Bit 7	**Power On.** Set when power is first applied to the instrument.
Bits 6, 3 & 1:	*Not used, permanently 0.*
Bit 5	**Command Error.** Set when a syntax error is detected in a command or parameter. The parser is reset and parsing continues at the next byte in the input stream.
Bit 4	**Execution Error.** Set when a non-zero value is written to the Execution Error register, if a syntactically correct command cannot be executed for any reason.
Bit 2	**Query Error.** Set when a query error occurs, because the controller has not issued commands and read response messages in the correct sequence.
Bit 0	**Operation Complete.** Set in response to the '*OPC' command.

The Standard Event Status Register is read and cleared by the *ESR? query, which returns a decimal number corresponding to the contents. On power-up it is set to 128, to report the power-on bit.

The Standard Event Status Enable Register provides a mask between the Event Status Register and the Status Byte Register. If any bit becomes ‘1’ in both registers, then the ESB bit will be set in the Status Byte Register. This enable register is set by the *ESE <NRF> command to a value 0 - 255, and read back by the *ESE? query (which will always return the value last set by the controller). On power-up it is set to 0.

Execution Error Register (EER)

This instrument specific register contains a number representing the last command processing error encountered over this interface. The error numbers have the following meaning:

0	No error has occurred since this register was last read.
100	**Enable Error:** For some reason the input enable command cannot be executed. The cause can be determined by reading the Input Trip and State Registers.
101	**Numeric Error:** the parameter value sent was outside the permitted range for the command in the present circumstances.
102	**Interruption Error:** the input has been disabled in order to execute a command (e.g. a mode or range change) which cannot be performed while the input is enabled. This error can be avoided by turning the input OFF before sending the command.
103	**Recall Error:** the store specified in a RECALL command either does not contain valid data, or is incompatible with the present setting of the 600W mode selection.
200	**Access Denied:** an attempt was made to change the instrument’s settings from an interface which is locked out of write privileges by a lock held by another interface.

The Execution Error Register is read and cleared using the ‘EER?’ command. On power up this register is set to 0 for all interface instances.

There is no corresponding mask register: if any of these errors occurs, then bit 4 of the Standard Event Status Register will be set. This bit can be masked from any further consequences by clearing bit 4 of the Standard Event Status Enable Register.

Status Byte Register (STB) and GPIB (optional) Service Request Enable Register (SRE)

These two registers are implemented as required by the IEEE Std. 488.2.
Any bits set in the Status Byte Register which correspond to bits set in the Service Request Enable Register will cause the RQS/MSS bit to be set in the Status Byte Register, thus generating a Service Request on the bus.

The Status Byte Register is read either by the *STB? query, which will return MSS in bit 6, or by a Serial Poll which will return RQS in bit 6. The Service Request Enable register is set by the *SRE <NRF> command and read by the *SRE? query.

Bits 7, 3 & 2: *Not used, permanently 0.*

Bit 6	**MSS/RQS**. This bit (as defined by IEEE Std. 488.2) contains alternatively the Master Status Summary message returned in response to the *STB? query, or the Requesting Service message returned in response to a Serial Poll. The RQS message is cleared when polled, but the MSS bit remains set for as long as the condition is true.
Bit 5	**ESB.** The **Event Status** Bit. This bit is set if any bits set in the Standard Event Status Register correspond to bits set in the Standard Event Status Enable Register.
Bit 4	**MAV.** The **Message Available** Bit. This will be set when the instrument has a response message formatted and ready to send to the controller. The bit will be cleared after the Response Message Terminator has been sent.
Bit 1	**INTR.** The **Input Trip** Bit. This bit is set if any bits set in the Input Trip Register correspond to bits set in the Input Trip Enable Register.
Bit 0	**INST.** The **Input State** Bit. This bit is set if any bits set in the Input State Register correspond to bits set in the Input Status Enable Register.

GPIB (optional) Parallel Poll (PRE)

Complete Parallel Poll capabilities are offered by this instrument as defined in IEEE Std. 488.1. The Parallel Poll Enable Register (which is set by the *PRE <NRF> command and read by the *PRE? query) specifies which bits in the Status Byte Register are to be used to form the **ist** local message. If any bit is ‘1’ in both the STB and the PRE then **ist** is ‘1’, otherwise it is ‘0’. The state of the **ist** message can also be read directly by the *IST? query.

The physical layer protocol of the Parallel Poll (determining which data line is to be driven and its logic sense) is configured by the PPC and PPE commands and released by the PPU and PPD commands in the manner defined by the standard. The instrument implements passive pull-up on the DIO lines during Parallel Poll.

Query Error Register – GPIB (optional) IEEE Std. 488.2 Error Handling

These errors are much more likely to occur on the semi-duplex GPIB interface, which requires the instrument to hold a response until addressed to talk by the controller. All the other interfaces provide full duplex communication, with buffering in the physical layer which will usually hold a response from the instrument until the controlling software reads it; there is no equivalent of the GPIB state ‘addressed to talk’, so the instrument is not aware of the actions of the controller.

The IEEE 488.2 UNTERMINATED error arises if the instrument is addressed to talk and has nothing to say, because the response formatter is inactive, and the input queue is empty. This will cause the Query Error bit to be set in the Standard Event Status Register, a value of 3 to be placed in the Query Error Register and the parser to be reset.

The IEEE 488.2 DEADLOCK error arises if the response formatter is waiting to send a response message and the input queue becomes full. This will cause the Query Error bit to be set in the Standard Event Status Register, a value of 2 to be placed in the Query Error Register and the response formatter to be reset, discarding the waiting response message. The parser will then start parsing the next <PROGRAM MESSAGE UNIT> from the input queue.

The IEEE 488.2 INTERRUPTED error arises if the response formatter is waiting to send a response message and a <PROGRAM MESSAGE TERMINATOR> has been read by the parser, or the input queue contains more than one END message. This will cause the Query Error bit to be set in the Standard Event Status Register, a value of 1 to be placed in the Query Error Register and the response formatter to be reset, discarding the waiting response message. The parser will then start parsing the next <PROGRAM MESSAGE UNIT> from the input queue.

Power on Settings

The following instrument status values are set at power on:

ISE	Input Status Enable Register	= 0
ITE	Input Trip Enable Register	= 0
EER	Execution Error Register	= 0
ESR	Standard Event Status Register	= 128 (pon bit set)
QER	Query Error Register †	= 0
ESE	Standard Event Status Enable Register †	= 0
STB	Status Byte Register	= 0
SRE	Service Request Enable Register †	= 0
PRE	Parallel Poll Response Enable Register †	= 0

† *Registers marked thus are normally only used through the optional GPIB interface.*

The Input State (ISR) and Trip (ITR) Registers will report any conditions which presently apply.

The instrument will be in local state with the keyboard active. The instrument parameters at power on are the same as at the last switch off, except 600W mode, which will always be disabled at power on, and possibly the input enable state, which by default is always off at power on, but may be configured by the user to be the same at power on as at the last switch off.

LD400 Status Model

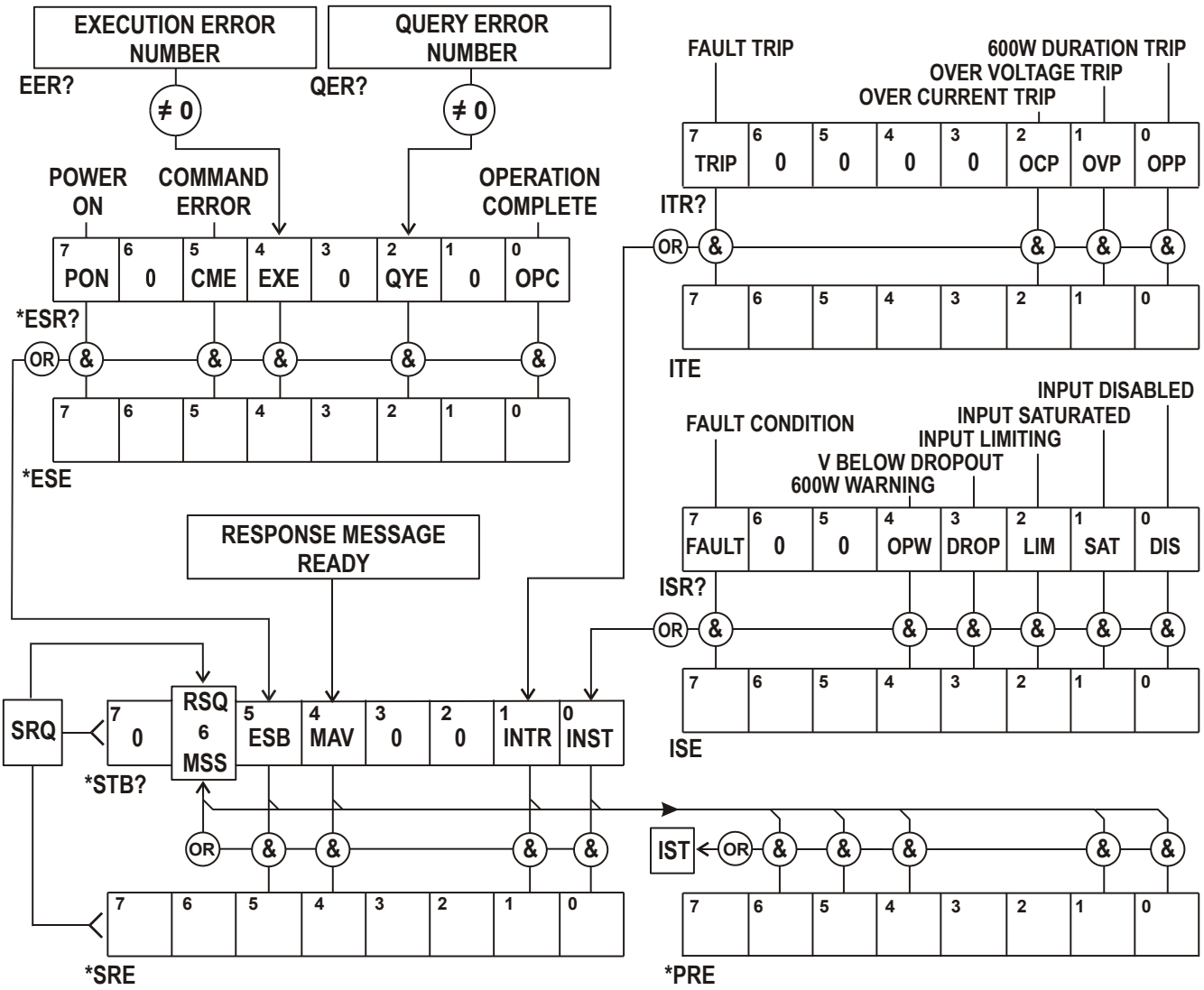

Register Summary

Set	Query	Name
†	ITR?	Input Trip Register
ITE	ITE?	Input Trip Enable Register
	ISR?	Input State Register
ISE	ISE?	Input State Enable Register
†	EER?	Execution Error Register
†	QER?	Query Error Register
†	*ESR?	Standard Event Status Register
*ESE	*ESE?	Standard Event Status Enable Register
	*STB?	Status Byte Register
*SRE	*SRE?	Status Byte Enable Register
*PRE	*PRE?	Parallel Poll Response Enable Register

† These registers are cleared after being queried, or by the *CLS command.

Remote Commands

Remote and Local Operation

At power-on the instrument will be in the local state, with normal keyboard operation possible. All remote interfaces are active and listening for a remote command. When any command is received from any interface the instrument will enter the remote state. In this state the keyboard is locked out, the display switches to the home screen, with R E M O T E displayed in place of the soft-key tabs. The instrument may be returned to the local state by pressing the **Local** key; however the remote state will be immediately re-entered if the instrument is addressed again or receives another command from any interface. It is the responsibility of the user to avoid any conflict if parameters are changed from the front panel while in the Local state.

Remote Command Handling

Each remote-control interface has a separate input queue which is filled, under interrupt, in a manner transparent to all other instrument operations. The RS232 interface implements flow control by sending XOFF when the queue contains approximately 200 characters, and then XON when about 100 free spaces become available. All the other interfaces have standard automatic flow control mechanisms built into their physical layer communication protocol.

Commands are taken from the input queues by the parser as available. Commands and queries from each queue are executed in order, but the order of execution of commands from different interfaces is not defined and should not be relied upon. It is strongly recommended that use should be made of the interface locking facilities described above. The parser will not start a new command until any previous command or query is complete. Responses are sent to the interface which issued the query. There is no internal output queue, so on the optional GPIB interface the response formatter will wait, indefinitely, if necessary, until the complete response message has been read by the controller, before the parser is allowed to start the next command in the input queue. On all other interfaces the response message is immediately sent into buffers in the physical layer.

Remote Command Formats

Commands are sent as <PROGRAM MESSAGES> by the controller, each consisting of zero or more <PROGRAM MESSAGE UNIT> elements, separated (if there is more than one such element) by <PROGRAM MESSAGE UNIT SEPARATOR> elements, and finally a <PROGRAM MESSAGE TERMINATOR>.

The <PROGRAM MESSAGE UNIT SEPARATOR> is the semi-colon character ';' (3BH).

The <PROGRAM MESSAGE TERMINATOR>, which separates or terminates <PROGRAM MESSAGES>, is the new line character (0AH), but in the case of the optional GPIB interface the hardware END message may also be used, either with the last character of the message or with the new line. In the case of the LAN interface, commands may not be split across TCP/IP packet boundaries.

A <PROGRAM MESSAGE UNIT> is any of the commands in the remote commands list, which must be sent in full as specified. A command must be separated from any parameters by <WHITE SPACE> (which is defined as the character codes 00H to 20H inclusive, excluding the new line character 0AH). No <WHITE SPACE> is permitted within any command identifier or parameter, but any other additional <WHITE SPACE> is ignored. Note that the Backspace character (07H) is treated as <WHITE SPACE>, so it cannot be used to delete incorrect characters, and will not hide the error.

The high bit of all characters is ignored, and all commands are case insensitive. Commands that require a numeric a parameter accept the free form <NRF> format; text parameters must be sent as Character Program Data <CPD> as specified.

<NRF> numbers must be in basic units, may have a decimal point and fractional part, and can include an exponent part if helpful. They are rounded to the precision supported, so (for transient frequency) the numbers 10000, 10e3 or 9999.99 all result in 10.00kHz.

Command Timing

There are no dependent parameters, coupled parameters, overlapping commands, expression program data elements or compound command program headers. Note, however, that the MODE command sets standard values for Level A, Level B, Range, and the Slew Rate, so these must be explicitly set afterwards. Alternatively it is possible to use the store and recall facilities of the instrument to quickly retrieve a complete set-up of an operating mode and its values.

All commands are separate and sequential, and are executed when parsed and immediately considered complete. To provide useful functionality, the Operation Complete bit (bit 0) in the Standard Event Status Register is only ever set by the *OPC command. Either the *OPC command or the *OPC? query can be used for device synchronisation due to the sequential nature of remote operations.

The actual electrical response to changes in load settings is subject to the present slew rate setting, but that is considered to be an aspect of normal operation and not part of the command execution time. If a slow slew rate is in use the V? and I? queries can be used to check progress.

Response Formats

Responses from the instrument to the controller are sent as <RESPONSE MESSAGES>, which consist of one <RESPONSE MESSAGE UNIT> followed by a <RESPONSE MESSAGE TERMINATOR>, which is the carriage return character (0DH) followed by the new line character (0AH) with, in the case of the optional GPIB only, the END message NL^END. This is shown as <RMT> in the descriptions below.

Each query produces a specific <RESPONSE MESSAGE> which is described in the entry for the query command in the remote commands list below. Most responses consist of a keyword followed by either text or a number in one of the following formats:

<NR1> An integer without a decimal point or a unit.
<NR2> A fixed point number with a fractional part but no exponent part.
<NR3> A floating point number with both a fractional part and an exponent part.
<CRD> Character Response Data, consisting of the text characters listed.

When helpful, numbers are followed by a units indication (which depends on the present load mode) to provide confirmation. The units used are: A, V, W, OHM, SIE & HZ (SIE is conductance in Siemens, or A/V.) Slew rates are expressed the basic unit (of the active mode) per second, with an exponent (which is always positive, with E+03 representing kUnits/s or Units/ms, and E+06 representing MUnits/s or Units/us).

Command List

This section lists all the commands and queries implemented in this instrument. All numeric parameters are shown as <NRF> and may be sent as <NR1>, <NR2> or <NR3> as described above. Command parameters (unlike responses) are not followed by a units indication.

Instrument Function Commands

MODE <CPD>

Set the load mode to <CPD>.
Where <CPD> can be C, P, R, G or V, corresponding to constant current, power, resistance, conductance or voltage.

The input will be automatically disabled if not previously done.
If the new mode has two ranges, the MODE command sets the high range.
This command also sets both the Level A and Level B settings to 0 for all modes except CR, when they are both set to 400Ω, and sets the Slew Rate to the Default value, which gives the best accuracy of the level settings.

MODE?

Returns the load mode selected.
The response is: MODE <CRD><RMT> where <CRD> can be C, P, R, G or V.

RANGE <NRF>	Set the Level Range for the present Load Mode, where <NRF> has the meaning: 0 = High Range, 1 = Low Range. Note that High range is the default setting.
RANGE?	Returns the load level range. The response is: RANGE <NR1><RMT> where <NR1> is either 0 or 1 (0=High Range, 1 =Low Range).
600W <NRF>	Set 600W mode on or off, where <NRF> has the meaning: 0=Off (400W mode), 1=On (600W mode).
600W?	Returns the setting of the 600W mode. The response is: 600W <NR1><RMT> where <NR1> is either 0 or 1, where 0=400W mode or 1=600W mode.
A <NRF>	Set Level A to <NRF>. The units are implied by the present load mode.
B <NRF>	Set Level B to <NRF>. The units are implied by the present load mode.
A?	Return the set Level of Level A. The response is: A <NR2>U<RMT> where the <NR2> is followed by a units suffix determined by the load mode.
B?	Return the set Level of Level B. The response is: B <NR2>U<RMT> where the <NR2> is followed by a units suffix determined by the load mode.
DROP <NRF>	Set the Dropout Voltage level to <NRF>, in Volts.
DROP?	Returns the set Dropout Voltage level. The response is: DROP <NR2>V<RMT> where <NR2> is in Volts.
SLEW <NRF>	Set the Slew rate to <NRF>, in unit/s (units of the present Load Mode) using an exponent as required.
SLEW?	Returns the set Slew rate. The response is: SLEW <NR3>U<RMT> where <NR3> is in Unit/s with the Unit determined by the present load mode and an exponent part as required.
SLOW <NRF>	Set Slow Start facility on or off, where <NRF> has the meaning: 0=Off, 1=On.
SLOW?	Returns the setting of the Slow Start facility. The response is: SLOW <NR1><RMT> where <NR1> is either 0 (=Off) or 1 (= On)
LVLSEL <CPD>	Set the Active Level Select to <CPD> Where <CPD> can be A, B, T, V or E corresponding to Level A, Level B, Transient, Ext Voltage and Ext TTL.
LVLSEL?	Returns the Level Select state. The response is: LVLSEL <CRD><RMT> Where <CRD> can be A, B, T, V or E corresponding to Level A, Level B, Transient, Ext Voltage and Ext TTL.
FREQ <NRF>	Set the Transient Frequency to <NRF>, in Hz.
FREQ?	Returns the set Transient Frequency. The response is: FREQ <NR2> HZ <RMT> where <NR2> is in Hz.
DUTY <NRF>	Set the Transient Duty Cycle (%A) to <NRF>, in percent (rounded to integer).
DUTY?	Returns the set Transient Duty Cycle (%A). The response is: DUTY <NR1>%<RMT> where <NR1> is a percentage.
VLIM <NRF> VLIM <CPD>	Set the Voltage Limit to <NRF>. Either VLIM 0 or alternatively VLIM NONE disables and removes any voltage limit.
VLIM?	Returns the Voltage limit. The response is: VLIM <NR2>V<RMT> where <NR2> is in Volts, or VLIM 0V<RMT> if no voltage limit is set.

ILIM <NRF> ILIM <CPD>	Set the Current limit to <NRF>. Either ILIM 0 or alternatively ILIM NONE disables and removes any current limit.
ILIM?	Returns the Current Limit. The response is either: ILIM <NR2>A<RMT> where <NR2> is in Amps, or ILIM 0A<RMT> if no current limit is set.
INP <NRF>	Set the input on or off where <NRF> has the meaning: 0=Off, 1=On.
INP?	Returns the input state. The response is INP <NR1><RMT> where <NR1> is either 0 (=Off) or 1 (= On).
V?	Returns the measured source input voltage. The response is <NR2>V<RMT> where <NR2> is in Volts.
I?	Returns the measured load current The response is <NR2>A<RMT> where <NR2> is in Amps.

Common Commands

*IDN?	Returns the instrument identification. The response is in the form <NAME>, <model>, <serial>, <version><RMT> where <NAME> is the manufacturer's name, <model> is the instrument type, <serial> is the interface serial number and <version> is the revision level of the firmware installed.
*RST	Resets the functional parameters of the instrument to the default settings as listed in the Factory Default Settings section. Does not affect the contents of the Save and Recall stores. Does not affect any remote interface settings.
*SAV <NRF>	Save the present set-up to the store specified by <NRF>, where <NRF> is 1-30.
*RCL <NRF>	Recall a set-up from the store specified by <NRF>, where <NRF> is 1-30. Configure the unit into 600W mode before recalling a store saved in that mode. Recalling an empty or invalid store is an execution error.
*OPC	Sets the Operation Complete bit (bit 0) in the Standard Event Status Register. This will happen immediately the command is executed because of the sequential nature of all operations.
*OPC?	Query Operation Complete status. The response is always 1<RMT> and is available immediately the command is executed because all commands are sequential.
*WAI	Wait for Operation Complete true. This command does nothing because all operations are sequential.
*TST?	The Load has no self-test capability and the response is always 0<RMT>.
*TRG	The Load has no trigger capability. The command is ignored in this instrument.

Status Commands

*CLS	Clear Status. Clears all status indications, including the Status Byte. Does not clear any Enable Registers.
ISR?	Query the Input State Register. The response is: <NR1><RMT>. Does not change the value, which continues to reflect the instrument condition.
ISE <NRF>	Set the Input State Enable Register to <NRF>
ISE?	Returns the value in the value in the Input State Enable Register. The response is: <NR1><RMT>.
ITR?	Query the Input Trip Register. The response format is <NR1><RMT>. Clears any bits that no longer apply.

ITE <NRF>	Set the Input Trip Enable Register to <NRF>
ITE?	Returns the value in the value in the Input Status Enable Register. The response is: <NR1><RMT>.
EER?	Query and clear Execution Error Register. The response format is <NR1><RMT>.
QER?	Query and clear Query Error Register. The response format is <NR1><RMT>.
*STB?	Report the value of the Status Byte. The response is: <NR1><RMT>. Because there is no output queue, MAV can only be read by an optional GPIB serial poll, not by this query, as any previous message must have already been sent.
*SRE <NRF>	Sets the Service Request Enable Register to <NRF>
*SRE?	Report the value in the Service Request Enable Register. The response is <NR1><RMT>.
*PRE <NRF>	Set the Parallel Poll Enable Register to the value <NRF>.
*PRE?	Report the value in the Parallel Poll Enable Register. The response is <NR1><RMT>.
*IST?	Returns the state of the **ist** local message as defined by IEEE Std. 488.2. The response is 0<RMT> if the local message is false, or 1<RMT> if true.

Interface Management Commands

LOCAL	Go to local. Any subsequent command will restore the remote state.
IFLOCK <NRF>	Set or Clear the lock requiring the instrument to respond only to this interface, where <NRF> has the meaning: 0 = clear and 1 = set the lock. It is an Execution Error (number 200) if the request is denied either because of conflict with a lock on this or another interface, or the user has disabled this interface from taking control using the web interface.
IFLOCK?	Query the status of the interface lock. The response is: <NR1><RMT> where <NR1> is = 0 if there is no active lock, = 1 if this interface instance owns the lock or = -1 if the lock is unavailable either because it is in use by another interface or the user has disabled this interface from taking control (via the web interface).
ADDRESS?	Returns the optional GPIB bus Address. The response is <NR1><RMT>.
IPADDR?	Returns the present IP address of the LAN interface, provided it is connected. If it is not connected, the response will be the static IP if configured to always use that static IP, otherwise it will be 0.0.0.0 if waiting for DHCP or Auto-IP. The response is nnn.nnn.nnn.nnn<RMT>, where each nnn is 0 to 255.
NETMASK?	Returns the present netmask of the LAN interface, provided it is connected. The response is nnn.nnn.nnn.nnn<RMT>, where each nnn is 0 to 255.
NETCONFIG?	Returns the first means by which an IP address will be sought. The response is <CRD><RMT> where <CRD> is DHCP, AUTO or STATIC.

The following commands specify the parameters to be used by the LAN interface. **Note:** a power cycle is required after these commands are sent before the new settings are used (or returned in response to the queries listed above). The instrument does not attempt to check the validity of the IP address or netmask in way other than checking that each part fits in 8 bits. The rear panel **LAN reset** switch will override these commands and restore the defaults as described earlier.

NETCONFIG <CPD>	Specifies the first means by which an IP address will be sought. <CPD> must be one of DHCP, AUTO or STATIC.

IPADDR <QUAD>	Sets the potential static IP address of the LAN interface (as on the webpage). The parameter must be strictly a dotted quad for the IP address, with each address part an <NR1> in the range 0 to 255, (e.g. 192.168.1.101).
NETMASK <QUAD>	Sets the netmask to accompany the static IP address of the LAN interface. The parameter must be strictly a dotted quad for the netmask, with each part an <NR1> in the range 0 to 255, (e.g. 255.255.255.0).

Maintenance

The Manufacturers or their agents overseas will provide a repair service for any unit developing a fault. Where owners wish to undertake their own maintenance work, this should only be done by skilled personnel in conjunction with the Service Guide, which may be obtained directly from the Manufacturers or their agents overseas.

Cleaning

If the instrument requires cleaning use a cloth that is only lightly dampened with water or a mild detergent.

WARNING! TO AVOID ELECTRIC SHOCK, OR DAMAGE TO THE INSTRUMENT, NEVER ALLOW WATER TO GET INSIDE THE CASE.
TO AVOID DAMAGE TO THE CASE NEVER CLEAN WITH SOLVENTS.

Fuses

The only replaceable fuse in the instrument is an internal fuse on the power supply PCB, which is intended to protect the unit from the accidental connection of 230V mains supply to a unit which is configured for 115V operation. Before replacing this fuse, first disconnect the instrument from all voltages, then remove the cover (6 screws) and ensure that the unit is configured correctly, as described in the 'Installation' chapter of this manual. The correct replacement fuse is:

20x5mm 500mA time-lag (T) 250Vac rated HBC (ceramic tube) fuse.

The transformer primaries are protected by non-resetting thermal fuses inside the windings, which can only be replaced by fitting new transformers. The secondary circuits are protected by encapsulated fuses soldered to the PSU PCB. See the Service Guide for replacement details.

Calibration

To ensure that the accuracy of the instrument remains within specification the calibration must be checked (and if necessary adjusted) annually. The procedure is detailed in the Service Guide, which also lists the calibrated test equipment required.

Firmware Update

The firmware of the instrument can be updated through the USB port using a PC software utility available from the manufacturer. This uses a HID (human interface device) USB class driver which will already be installed on any PC with a USB port. Instructions for the update procedure are provided with the PC utility and the firmware file.

Troubleshooting

If the instrument does not seem to be operating as expected, check the following before suspecting a fault.

8. Check the position of the EXT – INT remote voltage sense switch on the rear panel.
9. Check that the voltage drop across the interconnecting cables between source and load is not excessive, especially if remote sensing is being used. The actual voltage at the input terminals of the load must meet the minimum operating voltage requirement for the current level expected. Use a DVM to measure the actual voltage at the terminals.
10. If using a mode other than Constant Current (especially Constant Power or Voltage) consult the 'Application Notes' chapter of this manual for guidance, especially concerning start-up conditions and stability considerations.
11. If the Input trips as soon as it is enabled, this is often an indication of instability.
12. If the Dropout facility is not required, check that the Dropout Voltage is set to zero.
13. Enter the ***Utilities*** menu, perform ***Restore Factory Defaults*** and re-configure from scratch.
14. Read the whole of this manual carefully, as operation of the load, and its interactions with the source, can be quite complex.

Sécurité

Cet instrument est conforme à la classe de sécurité 1 de la classification CEI et il a été conçu pour satisfaire aux exigences de la norme EN61010-1 (Exigences de sécurité pour les équipements électriques de mesure, de contrôle et d'utilisation en laboratoire). Il s'agit d'un instrument de catégorie II d'installation prévu pour un fonctionnement à partir d'une alimentation monophasée standard.

Cet instrument a été testé conformément à la norme EN61010-1 et il a été fourni en état de sécurité d'utilisation. Le présent manuel d'instructions contient des informations et des avertissements que l'utilisateur doit suivre afin d'assurer une utilisation sans danger et de conserver l'appareil dans un parfait état de sécurité d'utilisation.

Cet instrument a été conçu pour être utilisé en intérieur, en environnement de pollution de deuxième degré à des plages de températures allant de 5 à 40 °C, et à des taux d'humidité compris entre 20 et 80 % (sans condensation). Il peut être soumis de temps à autre à des températures comprises entre +5 et -10 °C sans dégradation de sa sécurité. Ne pas le faire fonctionner en présence de condensation.

L'utilisation de cet appareil d'une manière non spécifiée par les présentes instructions risque d'affecter la protection de sécurité fournie.

L'unité n'a pas de fusible dans le circuit de charge : si la source connectée à la charge est capable de générer des courants importants en cas de défaillance, les utilisateurs doivent évaluer les risques engendrés et envisager l'inclusion d'un fusible, d'un disjoncteur ou d'un interrupteur approprié dans la connexion entre la source et la charge en question.

Ne pas utiliser l'instrument hors des plages de tension d'alimentation nominale recommandées ni hors de ses tolérances d'environnement.

AVERTISSEMENT ! CET INSTRUMENT DOIT ÊTRE RELIÉ À LA TERRE

Toute interruption du conducteur de terre du secteur à l'intérieur ou à l'extérieur de l'instrument rendra l'instrument dangereux. Une interruption intentionnelle est interdite. La sécurité de l'instrument ne doit pas être annulée par l'utilisation de rallonge sans conducteur de protection.

Lorsque l'instrument est relié au secteur, il est possible que les bornes soient sous tension : l'ouverture des couvercles ou la dépose de pièces (à l'exception des pièces accessibles manuellement) risque de mettre à découvert des pièces sous tension. L'instrument doit être débranché de toute source d'alimentation avant d'être ouvert pour un réglage, un remplacement, des travaux d'entretien ou de réparations quelconque(s).

Éviter dans la mesure du possible d'effectuer des réglages, des travaux de réparations ou d'entretien lorsque l'instrument ouvert est branché au secteur. Si cela s'avère toutefois indispensable, seul un technicien compétent connaissant les risques encourus doit effectuer ce genre de travaux.

S'il est évident que l'instrument est défectueux, qu'il a été soumis à des dommages mécaniques ou exposé à une humidité excessive ou à une corrosion chimique, la protection de sécurité en sera affaiblie et l'instrument ne doit pas être utilisé et doit être renvoyé pour vérification et réparation.

L'instrument contient à la fois des fusibles encapsulés et des fusibles thermiques sans réenclenchement ; ceux-ci ne peuvent pas être remplacés par l'utilisateur. Le court-circuitage de ces dispositifs de protection est interdit.

Ne pas mouiller l'instrument lors de son nettoyage.

Les symboles suivants figurent sur l'instrument ainsi que dans le présent manuel :. -

⚠ **Avertissement** se reporter à la documentation jointe, une mauvaise utilisation peut endommager l'instrument.

∿ Courant O Netz OFF (aus) I Alimentation

Sicherheit

Dieses Gerät wurde nach der Sicherheitsklasse (Schutzart) I der IEC-Klassifikation und gemäß den europäischen Vorschriften EN61010−1 (Sicherheitsvorschriften für elektrische Mess-, Steuer-, Regel- und Laboranlagen) entwickelt. Es handelt sich um ein Gerät der Installationskategorie II, das für den Betrieb mit einer normalen einphasigen Versorgung vorgesehen ist.

Das Gerät wurde gemäß den Vorschriften EN61010−1 geprüft und in sicherem Zustand geliefert. Die vorliegende Anleitung enthält vom Benutzer zu beachtende Informationen und Warnungen, die den sicheren Betrieb und den sicheren Zustand des Gerätes gewährleisten.

Dieses Gerät ist für den Betrieb in Innenräumen mit Verschmutzungsgrad 2 und für einen Temperaturbereich von +5 °C bis +40 °C bei 20 − 80 % relativer Feuchtigkeit (nicht kondensierend) vorgesehen. Gelegentlich kann es Temperaturen zwischen +5°C und −10°C ausgesetzt werden, ohne dass seine Sicherheit dadurch beeinträchtigt wird. Betreiben Sie das Gerät jedoch auf keinen Fall, solange Kondensation vorhanden ist.

Ein Einsatz dieses Geräts in einer Weise, die von dieser Anleitung nicht vorgesehen ist, kann seine Sicherheit beeinträchtigen.

Das Gerät hat keine Sicherung im Lastkreis: Falls die an der Last angeschlossene Quelle im Fehlerfall erhebliche Ströme erzeugen kann, muss der Benutzer die damit verbundenen Risiken bewerten und die Verwendung einer entsprechenden Sicherung, eines Leistungsschalters oder anderen Schalters in der Verbindung zwischen Quelle und Last in Betracht ziehen.

Auf keinen Fall das Gerät außerhalb der angegebenen Nennversorgungsspannungen oder Umgebungsbedingungen betreiben.

ACHTUNG! DIESES GERÄT MUSS GEERDET WERDEN!

Jegliche Unterbrechung der Netzerde, ob im Innern oder außerhalb des Geräts, macht das Gerät zur Gefahrenquelle! Eine absichtliche Unterbrechung ist verboten! Die Schutzwirkung darf durch Verwendung eines Verlängerungskabels ohne Schutzleiter nicht aufgehoben werden.

Ist das Gerät an die elektrische Versorgung angeschlossen, können die Klemmen unter Spannung stehen, sodass beim Entfernen von Verkleidungs- oder sonstigen Teilen (mit Ausnahme der Teile, zu denen Zugang mit der Hand möglich ist) höchstwahrscheinlich spannungsführende Teile bloßgelegt werden. Vor dem Öffnen des Geräts zu Einstellungs-, Auswechslungs-, Wartungs- oder Reparaturzwecken ist dieses stets von sämtlichen Spannungsquellen abzuklemmen.

Jegliche Einstellung, Wartung und Reparatur am geöffneten, unter Spannung stehenden Gerät ist nach Möglichkeit zu vermeiden. Falls unvermeidlich, sollten solche Arbeiten nur von qualifiziertem Personal ausgeführt werden, das sich der Gefahren bewusst ist.

Ist das Gerät eindeutig fehlerbehaftet bzw. wurde es mechanisch beschädigt, übermäßiger Feuchtigkeit oder chemischer Korrosion ausgesetzt, so können die Schutzeinrichtungen beeinträchtigt sein, weshalb das Gerät aus dem Verkehr gezogen und zur Überprüfung und Reparatur eingesandt werden sollte.

Das Gerät enthält sowohl eingekapselte Sicherungen als auch eine nicht rückstellbare thermische Sicherung; diese Sicherungen können vom Benutzer nicht ausgetauscht werden. Es ist verboten, diese Schutzeinrichtungen kurzzuschließen.

Beim Reinigen darauf achten, dass das Gerät nicht nass wird.

Am Gerät werden folgende Symbole verwendet:

⚠ Vorsicht! Bitte beachten Sie die beigefügten Unterlagen.
Falsche Bedienung kann Schaden am Gerät verursachen!

∿ Wechselstrom O Netz OFF (aus) I Netz ON (ein)

Sicurezza

Questo strumento appartiene alla Categoria di Sicurezza 1 secondo la classifica IEC ed è stato progettato in modo da soddisfare i criteri EN61010−1 (requisiti di Sicurezza per Apparecchiature di misura, controllo e per uso in laboratorio). È uno strumento di Categoria II di installazione e inteso per funzionamento con un'alimentazione normale monofase.

Questo strumento ha superato le prove previste da EN61010−1 e viene fornito in uno stato di sicurezza normale. Questo manuale contiene informazioni e avvertenze che devono essere seguite per assicurare un funzionamento sicuro e mantenere lo strumento in condizioni di sicurezza.

Questo strumento è stato progettato per uso interno in un ambiente con grado di inquinamento 2, nell'intervallo di temperatura che va da 5°C a 40°C, con 20%− 80% UR (in assenza di condensa). Può occasionalmente essere sottoposto a temperature fra +5°C e −10°C senza comprometterne la sicurezza. Non usare in presenza di condensa.

L'uso dello strumento in maniera non conforme a quanto specificato in queste istruzioni potrebbe pregiudicare la protezione di cui è dotato.

L'unità non è dotata del fusibile nel circuito di carico: se la sorgente collegata al carico è in grado di generare notevoli correnti in caso di guasto, gli utenti dovrebbero valutare i rischi e considerare l'inclusione di un opportuno fusibile, interruttore automatico o interruttore nel collegamento tra la sorgente e questo carico.

Non usare lo strumento per misurare tensioni al di sopra dei valori nominali o in condizioni ambientali al di fuori di quelle specificate.

AVVERTENZA! LO STRUMENTO DEVE ESSERE PROVVISTO DI MESSA A TERRA

L'interruzione della messa a terra all'interno o all'esterno dello strumento ne rende pericoloso l'utilizzo. L'interruzione intenzionale della messa a terra è severamente vietata. L'azione protettiva della messa a terra non deve essere annullata dall'utilizzo di una prolunga priva di conduttore di protezione.

Quando lo strumento è collegato all'alimentazione i terminali potrebbero essere sotto tensione ed è probabile che l'apertura delle coperture o la rimozione di alcune parti (eccetto quelle a portata di mano) causi l'esposizione di elementi sotto tensione. L'apparecchio deve essere scollegato da tutte le sorgenti di alimentazione prima di essere aperto per effettuare regolazioni, sostituzioni, operazioni di manutenzione o riparazioni.

Qualsiasi regolazione, manutenzione o riparazione dello strumento aperto, in tensione, deve essere evitata e, se inevitabile, deve essere effettuata esclusivamente da personale competente, consapevole del possibile pericolo.

Quando sia chiaro che lo strumento è difettoso, o che ha subito un danno meccanico, un eccesso di umidità, o corrosione a mezzo di agenti chimici, la sicurezza potrebbe essere stata compromessa e lo strumento deve essere ritirato dall'uso e rimandato indietro per le prove e le riparazioni del caso.

Lo strumento contiene sia fusibili di tipo incapsulato che di tipo termico senza ripristino; questi non possono essere sostituiti dall'utente. È vietato cortocircuitare questi dispositivi di protezione.

Evitare di bagnare lo strumento quando lo si pulisce.

Sullo strumento e in questo manuale si fa uso dei seguenti simboli.−

⚠ **Attenzione** Vedere i documenti allegati.
L'uso errato può danneggiare lo strumento.

∼ Corrente Alternata

O alimentazione OFF (spenta)

I alimentazione ON (accesa)

Seguridad

El presente instrumento pertenece a la Clase de Seguridad I de la clasificación CEI y ha sido diseñado para cumplir las prescripciones de la norma EN61010-1 (Requisitos de seguridad de equipos eléctricos de medida, control y uso en laboratorio). Se trata de un instrumento de la Categoría de Instalación II que se debe alimentar con una fuente monofásica normal.

Este instrumento se ha sometido a pruebas con arreglo a la norma EN61010-1 y se suministra en condiciones de funcionamiento seguro. El presente manual de instrucciones contiene información y advertencias que el usuario debe seguir, con el fin de garantizar y mantener la seguridad de funcionamiento.

Este instrumento ha sido diseñado para su uso en interiores, en entornos con una contaminación de grado 2 y dentro de un intervalo de temperaturas comprendido entre 5 °C y 40 °C, con una humedad relativa comprendida entre el 20 % y el 80 % (sin condensación). Se puede someter ocasionalmente a temperaturas comprendidas entre +5 °C y –10 °C, sin que su seguridad se vea reducida. No se debe utilizar cuando haya condensación.

El uso de este instrumento de forma distinta a la especificada en estas instrucciones puede afectar a sus mecanismos de seguridad.

La unidad no dispone de fusible en el circuito de carga: si la fuente conectada a la carga es capaz de generar corrientes significativas en caso de fallo, los usuarios deberán evaluar los riesgos implícitos y considerar la inclusión de un fusible, disyuntor o interruptor adecuado en la conexión entre la fuente y esta carga.

No utilice el instrumento con voltajes ni en entornos que se encuentren fuera del intervalo especificado.

¡ADVERTENCIA! ESTE INSTRUMENTO DEBE CONECTARSE A TIERRA

Cualquier interrupción del conductor de puesta a tierra, dentro o fuera del instrumento, hará que este resulte peligroso. Está prohibida la interrupción intencionada. No se debe inhibir este mecanismo de protección mediante un alargador que no tenga conductor de toma de tierra.

Cuando el instrumento esté conectado a la fuente de alimentación puede haber terminales con tensión y es probable que, si se abre la carcasa o se retiran piezas a las que no sea posible acceder manualmente en condiciones normales, queden al descubierto componentes con tensión. Es necesario desconectar el instrumento de cualquier fuente de alimentación antes de abrirlo para realizar tareas de ajuste, sustitución, mantenimiento o reparación.

Se debe evitar en la medida de lo posible la realización de cualquier tarea de ajuste, mantenimiento o reparación del instrumento abierto con tensión y, si fuera inevitable, solo la realizará una persona con la preparación suficiente y que conozca los peligros inherentes.

Si el instrumento resultara estar claramente defectuoso, hubiera sido sometido a un daño mecánico, a humedad excesiva o a corrosión química, su protección de seguridad podría fallar, por lo que será necesario dejar de utilizar el aparato y devolverlo para su comprobación y reparación.

Este instrumento contiene tanto fusibles encapsulados como fusibles térmicos no reiniciables, los cuales no podrán ser sustituidos por el usuario. Queda prohibido cortocircuitar estos dispositivos de protección.

No humedezca el instrumento al limpiarlo.

En el instrumento y en este manual se utilizan los siguientes símbolos:

⚠ **Precaución** consulte la documentación adjunta,
una operación incorrecta podría dañar el instrumento.

∼ Corriente alterna (CA).

O alimentación de red OFF (desconectada).

I alimentación de red ON (conectada).

EXCELLENCE THROUGH EXPERIENCE

Aim-TTi is the trading name of Thurlby Thandar Instruments Ltd. (TTi), one of Europe's leading manufacturers of test and measurement instruments.

The company has wide experience in the design and manufacture of advanced test instruments and power supplies built up over more than thirty years.

The company is based in the United Kingdom, and all products are built at the main facility in Huntingdon, close to the famous university city of Cambridge

TRACEABLE QUALITY SYSTEMS

TTi is an ISO9001 registered company operating fully traceable quality systems for all processes from design through to final calibration

ISO9001:2015
Certificate number FM 20695

WHERE TO BUY AIM-TTI PRODUCTS

Aim-TTi products are widely available from a network of distributors and agents in more than sixty countries across the world.

To find your local distributor, please visit our website which provides full contact details

Designed and built in Europe by:

Thurlby Thandar Instruments Ltd.
Glebe Road, Huntingdon, Cambridgeshire.
PE29 7DR United Kingdom
Tel: +44 (0)1480 412451
Email: sales@aimtti.com
Web: www.aimtti.com

48511-1730 Issue 9