INSTRUCTION MANUAL

EN

FX Series

PowerFlex DC Power Supply with 2 and 3 channel versions

1 - Product Description

1. Product Description 3
2. Safety 4
Symbols 4
Safety Notices 5
3. Installation 6
Mains Operating Voltage 6
Mains Lead 6
Mounting 6
Ventilation 6
4. Instrument Overview 7
5. Getting Started 9
Using this manual 9
Switching on 9
The Home Screen 10
Initial operation 11
6. Settings Menu 12
7. System Settings 13
Calibration 13
Error Log 13
Info 14
Help 14
Brightness 14
Reset Instrument 14
Buzzer 14
Encoder State 14
8. Store and Recall of Settings 15
9. Notes on Operation 16
Accuracy and Resolution 16

Remote Sense 16

Parallel Wiring of Outputs 17

Series Wiring of Outputs 18

Instantaneous Current Output 19

Output On/Off and Response Speed 19

Using OVP and OCP 19

Over-temperature Trip (OTP) 20

10. Remote Operation 21

Remote Interface Configuration 21

USB Interface 21

Status Reporting 22

11. SCPI Commands 26

SCPI Overview 26

Parameter Data Format 27

SCPI Subsystems 27

Query commands 27

Status Commands 27

SYSTem Subsystem 29

STATus Subsystem 30

OUTPut Subsystem 30

SOURce Subsystem 31

MEASure Subsystem 32

12. Maintenance 33

Cleaning 33

Fuse 33

Calibration 33

Firmware Update 34

13. Technical Specifications 35

14. Default Values 37

1. PRODUCT DESCRIPTION

The FX series of power supplies seamlessly combines versatility, and safety within a compact design. SELV compliant with the flexibility of PowerFlex, it's the ultimate choice for test and laboratory use.

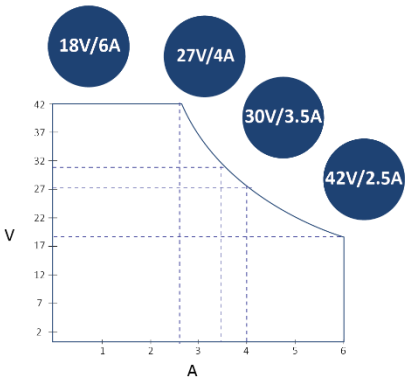

FX100 PowerFlex

Aim-TTi Powerflex is an advanced intelligent auto-ranging capability. It dynamically adjusts the operating range within the power envelope of the output.

Tap directly on the 4.3-inch colour touch screen for precise adjustments or use the tactile rotary controls for a hands-on feel.

Connect via USB for full remote control, free Test Bridge PC software enables logging and sequencing for multiple products.

Independently adjust voltage and current settings. Alternatively, use simultaneous output tracking to synchronize voltage levels across both outputs.

Current meter averaging is independently selectable across all outputs. Instant individual output on/off control, plus versatile user configurable Multi on/off with one press to activate or deactivate a combination of outputs.

Customisable OVP and OCP levels can be set to limit the range to user defined maximums.

Store up to 25 different setups effortlessly. Seamlessly switch between preferred configurations from one menu.

The FX100DP/TP models are designed with your workspace in mind. Their compact footprint (214 x 140 x 300mm (WxHxD)) ensures they won't take up unnecessary space on your bench or shelf. The low-pressure fan-assisted cooling system keeps things cool without adding to the audible noise.

The latest revisions of this manual, device drivers, and software tools can be downloaded

from: http://www.aimtti.com/support

1 - Product Description

2. SAFETY

Symbols

This instruction manual contains information and warnings which must be followed by the user to ensure safe operation and to retain the instrument in a safe condition.

The following symbols are displayed on the instrument and throughout the manual, to ensure the safety of the user and the instrument, all information must be read before proceeding.

WARNING

Indicates a hazard that, if not avoided, could result in injury or death.

CAUTION

Indicates a hazard that could damage the product and may result in loss of important data or invalidation of the warranty.

NOTE

Indicates a helpful tip.

EXAMPLE

Indicates an example to show further details.

⏚	The terminal is connected to chassis ground.
O	Mains supply OFF
I	Mains supply ON.
∿	Alternating current (AC).

Safety Notices

This instrument is:

- A safety Class I instrument according to IEC classification and has been designed to meet the requirements of EN61010-1 (Safety Requirements for Electrical Equipment for Measurement, Control and Laboratory Use). It is an Installation Category II instrument intended for operation from a normal single-phase supply.

- Designed for indoor use in a Pollution Degree 2 environment in the temperature range 5°C to 40°C, 20%- 80% RH (non-condensing). It may occasionally be subjected to temperatures between +5°C and –10°C without degradation of its safety. Do not operate while condensation is present.

- Tested in accordance with EN61010-1 and has been supplied in a safe condition. This instruction manual contains some information and warnings which have to be followed by the user to ensure safe operation and to keep the instrument in a safe condition.

WARNING

Do not operate while condensation is present.

Do not operate outside its rated supply voltages or environmental range.

THIS INSTRUMENT MUST BE EARTHED.

Ensure that only fuses with the required rated current and of the specified type are used for replacement.

The use of makeshift fuses and the short-circuiting of fuse holders is prohibited.

Use of this instrument in a manner not specified by these instructions may impair the safety protection provided.

Any interruption of the mains earth connector, inside or outside, will make the instrument dangerous. Intentional interruption is prohibited. The protective action must not be negated by the use of an extension cord without a protective conductor.

Any adjustment, maintenance, and repair of the opened instrument under voltage must be avoided. When connected, terminals may be live and opening the covers or removal of parts (except those that can be accessed by hand) may expose live parts.

Capacitors inside the power supply may still be charged even if the power supply has been disconnected from all voltage sources but will be safely discharged about 10 minutes after switching off.

To avoid electric shock or damage to the instrument, never allow water to get inside the case. If the instrument is clearly defective, or has been subject to mechanical damage, excessive moisture, or chemical corrosion, the safety protection may be impaired, and it must be withdrawn from use and returned for repair.

CAUTION

Do not wet when cleaning; use only a soft dry cloth to clean the screen.
Do not use a sharp or pointed objects to operate the touch screen.
Take care not to restrict the inlet vents at the front and rear of the instrument.

3. INSTALLATION

Mains Operating Voltage

This instrument has a universal input range and will operate from a nominal 100V or 230V mains supply without adjustment. Check that the local supply meets the AC Input requirement printed on the rear panel, also given in the Specification see '*Technical Specifications*'.

Mains Lead

Connect the instrument to the AC supply using the mains lead provided. Should a mains plug be required for a different mains outlet socket, a suitably rated and approved mains lead set should be used, which is fitted with the required wall plug and an IEC60320 C13 connector for the instrument end. To determine the minimum current rating of the lead set for the intended AC supply, refer to the power rating information on the equipment or in the Specification.

Mounting

This instrument is suitable for bench use. It is delivered with feet for bench mounting, the front feet include a tilt mechanism for optimal panel angle.

A rack kit for mounting in a 19" rack is available from the manufacturers, or their agents and distributors overseas.

Ventilation

The power supply is cooled by an intelligent multi-speed fan which vents at the rear. Cooling air is drawn in through slots in the front panel, ensure that the ventilation slots and rear fan exhaust are not obstructed. In the event of overheating, a temperature trip will turn all of the outputs off – see *'Over-temperature Trip (OTP)'.*

4. INSTRUMENT OVERVIEW

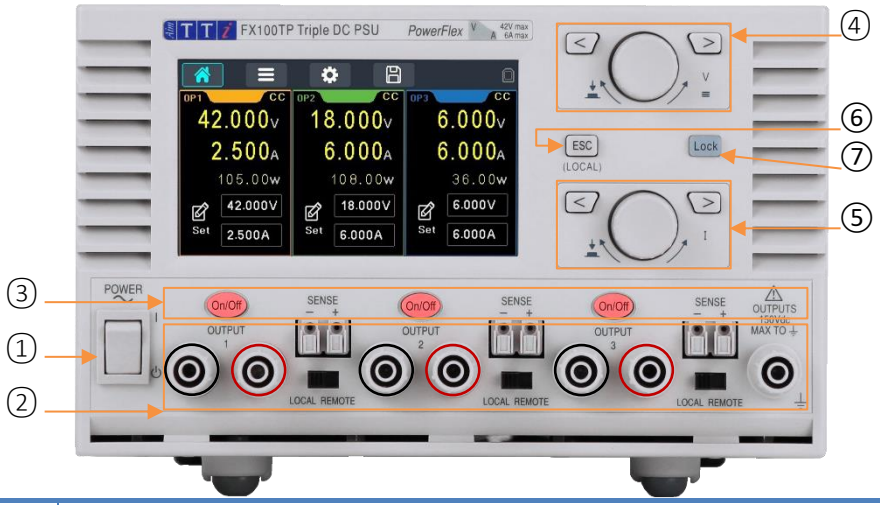

①	Power	
②	Output terminals	For each output, the load should be connected to the positive (red) and negative (black) terminals marked OUTPUT. Both are fully floating and can be connected to the ground terminal or to a terminal of another output. The outputs of the power supply are fully floating and may connected to other equipment resulting in the voltage appearing at a terminal being greater than the output voltage alone. CAUTION The maximum permissible voltage between any terminal and earth ground (⏚) is 150VDC; the maximum permissible voltage between either terminal of one output and either terminal of another output on the same power supply is also 150VDC. Exceeding the maximum reverse voltage (60V) and current (3A) will damage the instrument.
		Remote sense connections to the load, if required, are made from the positive (+) and negative (-) SENSE terminals. Move the SENSE switch to REMOTE when remote sensing is required. Switch back to LOCAL when remote sensing is not in use. See *'Remote Sense'* for more information.
		The Earth terminal is connected to the chassis and safety earth ground.
③	DC output On/Off	Each output has a dedicated DC On/Off key. Alternatively turn a combination of outputs on or off simultaneously using the Multi On/ Multi Off . see '*Multi On/Off Operation*'.
④	Voltage adjust and navigation	Arrow Keys & Rotary Knob See 'Initial operation' for more information.
⑤	Current adjust	
⑥	ESC key	Exit the selection.
⑦	Lock key	The LOCK key will illuminate when active and a symbol will appear on the status bar, indicating that the entire front panel is locked. In this mode, only navigation between menus is permitted. Long press to deactivate the lock.

4 - Instrument Overview

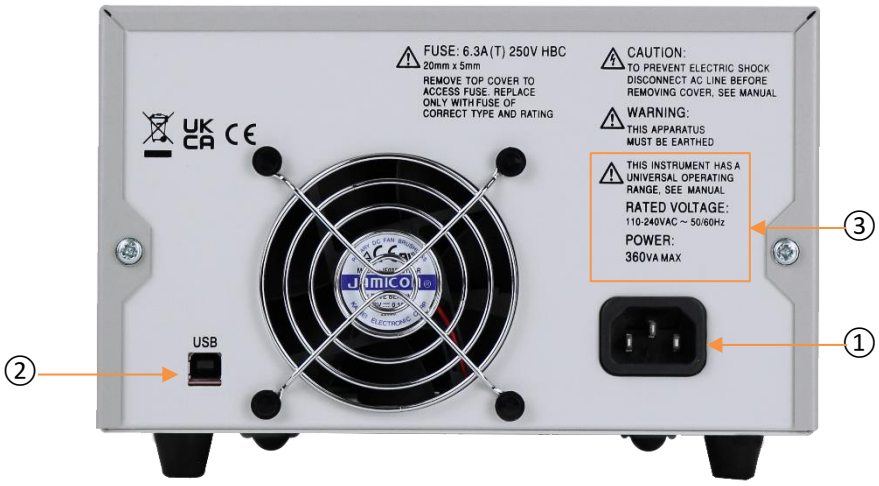

①	AC power inlet	Connect to AC mains using the power lead provided. See '*Mains Lead*' for more details.
②	USB	The USB port accepts a standard USB cable. The Windows plug-and-play functions should automatically recognise that the instrument has been connected.
③	Input voltage rating	This instrument has a universal input range and will operate from 100V or 230V mains supply without adjustment. Check that the local supply meets the AC Input requirement

5. GETTING STARTED

Using this manual

This section is a general introduction to the operation of the instrument and is intended to be read before using the power supply for the first time.

In this manual, front panel, keys and sockets are shown in capitals, e.g., ON, OFF. Text and messages displayed on the LCD are shown in a different font, e.g., *V Set, I Set.*

The descriptions in this manual relate to using the instrument via the touch screen, alternatively, the hard keys and rotary knob can be used. See '*Navigation Controls*' for details on how to use the instrument in this way.

NOTE

The pop-up screens for parameters will only occur when using the touch screen.

Trip/System Failure, Error, and Warning pop-up screens will appear when using any form of navigation.

The FX Series consists of a dual output and a triple output version, throughout this document the screen images shown are of the triple version only.

Switching on

Connect the instrument to the AC supply using the mains lead provided.

Press the POWER switch. At power up, the instrument displays a start-up message during installation.

Start-up takes a few seconds, after which the home screen is displayed.

WARNING

To fully disconnect from the AC supply, unplug the mains cord from the back of the instrument or switch off at the AC supply outlet; make sure that the means of disconnection are readily accessible. Disconnect from the AC supply when not in use.

The Home Screen

The Home screen shows the primary information for all outputs simultaneously whilst enabling voltage and current to be set for any output.

①	Menu keys		
	Home		Home menu, the active menu is highlighted in blue.
	Settings		Channel settings, see 'Settings Menu' for more details
	Menu		System menu, see 'System Settings' for more details
	Save / load		Save and recall settings, see 'Store and Recall of Settings' for more details
	Lock icon		Locked. In this mode, only navigation between menus is permitted.
	USB icon		USB not detected
			USB detected
②	Status bar		
	Output		1 (orange), 2 (green), 3 (blue)
	Operating mode status	CV CC	CV (constant voltage): The output voltage is equal to the set value, the current setting represents the limiting value of current that could flow (the current limit). CC (constant current): The output current is equal to the set value, the voltage setting represents the limiting value of voltage that could be applied (the voltage limit). *Switch-over between CV and CC modes occurs automatically, dependent upon the load conditions and the settings. The voltage and current settings may also be described as limits since they represent the maximum values that can apply at the load.*
	⑥ Multi-On/Multi-Off		Multi-On/Multi-Off active. See 'Multi On/Off Operation'
	⑦ Tracking		Voltage tracking active, V set is disabled on the second output. See *'Voltage Tracking'*
③	Meter Status		Live output voltage and current shown is always shown on the meter.
		6.0	Output On (Yellow)
		5.0	Output Off, voltage still present on the terminal (Red)
		1.0	Output Off (grey)
	⑧ Iavg		Current averaging (Iavg) active on selected output. See 'Current Meter Averaging'
④	Power calculation		Output power supplied in Watts. See 'Meter Status' above for status information.
⑤	Set Voltage / Current		Set voltage and Set current, select to activate the editing fields for live adjustment via the rotary knob. Select the individual fields to set via an on-screen *numeric keypad. See 'Initial* operation' for more details.

Initial operation

The user interface can be navigated using the touch screen, rotary knob, front panel keys or a combination of all three options.

Many settings can be made quickly and easily using the touch screen alone; the rotary knob is most useful when, for example, a parameter is being frequently incremented or decremented during manual testing.

Setting voltage or current using the numeric keypad

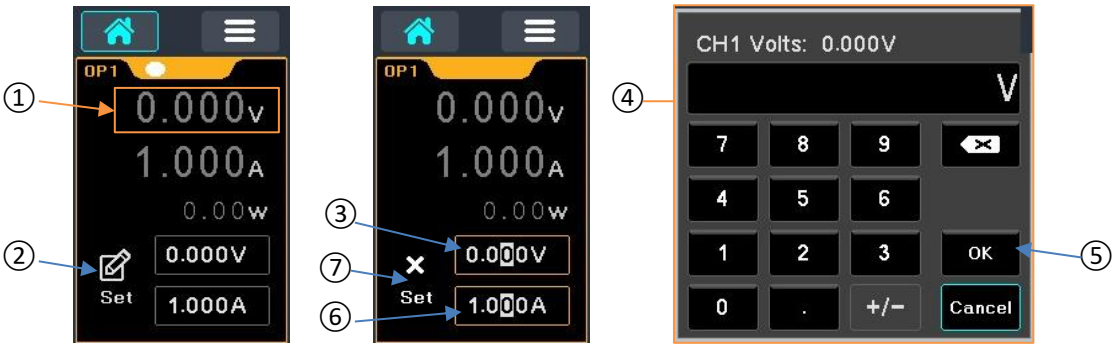

To set the voltage ①, touch the Set icon ② this will activate the editing for the required output, e.g. Output 1.

NOTE

When output editing is active, both encoders will be available to live adjust the Voltage and current values.

Touch the Voltage field ③, A numeric keypad will appear ④- enter the required values and touch OK ⑤. To set the current, once the output editing is active, touch the current field ⑥. To deactivate the output editing, touch X Set ⑦ or press the ESC key ⑧ on the front panel.

Adjusting voltage and current simultaneously using the rotary knob and keys

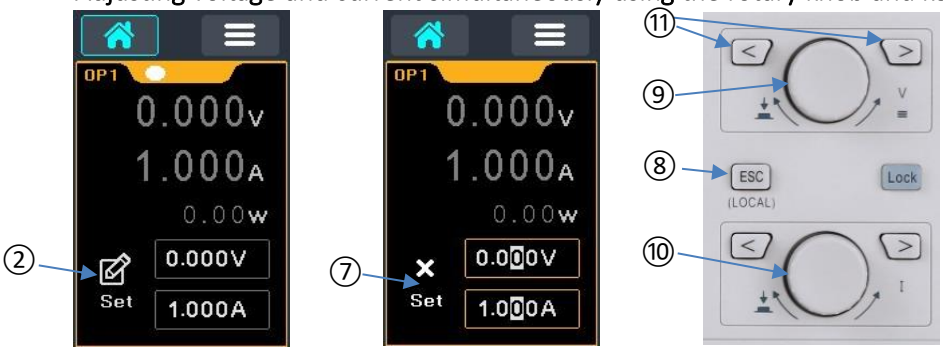

Activate the output editing state by selecting the *'Set'* icon ②, this will activate both voltage ⑨ and current ⑩ knobs, the voltage and current can now be incremented or decremented by turning the knob. The < and > arrow keys ⑪ can be used to move the cursor and edit the value at a higher or lower resolution. To deactivate the output editing, touch X Set ⑦ or press the ESC key ⑧ on the front panel.

The rotary knobs offer two different states of editing – 2 State (default setting) and 3 State. For further information, see '*Encoder State*'

Navigation using the rotary knob and keys

Use the < > keys on the front panel ⑪ or the Voltage rotary knob ⑨ to highlight the actionable field and press the knob to 'okay' the action. When an editable field is selected, adjustments can be made by turning the knob until the required value is selected. Press the knob to action the change.

Enabling and Disabling the output

Alternate presses of the On/Off key turn the output on or off. The on state is indicated by the key being illuminated in red.

6. SETTINGS MENU

Current Meter Averaging

Enable

Disable

Current meter averaging is useful when the load current is varying rapidly. It can help to reduce the variation in the reading and make the display easier to follow. Pressing the I avg button toggles current meter averaging on or off. The present status is shown in the key and by an asterisk (*) symbol appearing on the home screen beside the current meter.

Over-Voltage and Over-Current protection

The power supply offers user adjustable over-voltage protection (OVP) and over-current protection (OCP). If a voltage is detected that exceeds the OVP level, or a current is detected that exceeds the OCP level, the output is switched off and the message OVP or OCP is displayed.

The OVP and OCP limits are 47V on output 1 and 2, 8V on output 3 (FX100TP only), 6.6A on all outputs. Pressing the OVP/OCP parameter field will activate the editing. A new value can be entered using the numeric keypad or the rotary knob. More information on using OVP and OCP is provided in section '*Using OVP and OCP*'.

Multi On/Off Operation

The output On/Off keys can be set up to enable more than one output when pressed, this is called Multi On/Off. Any combination of outputs can be selected by pressing the Multi On/Off button, the button will toggle through all of the available options when pressed.

EXAMPLE

The icon shows that output 1 & 2 are 'active'. If either outputs (1 or 2) On/Off keys are pressed both outputs 1 & 2 will be enabled.

This symbol will appear in the status bar when Multi On/Off is active for that output.

Voltage Tracking

Tracking voltages can be useful in setting up adjustable voltages of equal or opposite polarity, or when outputs are wired in parallel or in series.

Enabled

The power supply can be set up such that the voltage of output 2 tracks that of output 1. To enable the tracking, press the Track button, the status of the tracking is shown in the button. The tracking status is also shown on the meter status bar on the home screen.

Power-On Settings

Param- The default behaviour is to return the settings (set volts, set current, tracking etc.) to those that existed at power-down (Latest). This can be changed so that the settings are always at factory defaults (Default). This includes all outputs being set to Off.

Output- At power-up the default behaviour is for all the outputs to be set to Off (Always Off). However, the user can change this default setting such that the outputs are restored to their condition when the instrument was powered down (As Power Down).

7. SYSTEM SETTINGS

Calibration

The Calibration menu enables the instrument to be re-calibrated when required. A 4-digit pass code is set to prevent unauthorised calibration, a prompt will appear for the password when the Calibration button is pressed. The calibration password can be found in the instrument Service Guide.

CAUTION

Calibration will overwrite the existing settings and should only be carried out by qualified personnel in conjunction with the instrument Service Guide and the necessary precision equipment.

Error Log

Last Displayed Err: A pop-up will appear with the last displayed message. By pressing OK, the user will be returned to the messages screen.

REM Error Log: Displays any error message that occurred while using Remote Commands.

Info

Contains the serial number and firmware version for the instrument.

Help

The Help menu provides explanations on how to use this instrument.

Brightness

The LCD brightness can be adjusted in 3 steps:

- low,
- medium (default) and
- high,

by pressing the Brightness button.

Reset Instrument

This function can be used to return most of the instrument settings including Voltage, Current, OVP, OCP, Output On/Off, Current Meter Averaging, Multi-On/Off Action and System Preferences back to the factory default values as listed in '*Default Values*' The Store memories are unaffected. Press Reset Unit, to reset.

Buzzer

An alert sounder is incorporated that produces a "beep" under specific conditions. By default, a beep will be sounded when an illegal key entry is made, or when a trip condition occurs. This can be disabled by pressing the Buzzer button, if preferred.

Encoder State

2 State (default): The rotary knob is used together with the < and > keys to select the parameter window and press the knob to confirm. When selected, the parameter box outline will turn blue, press to select the parameter and enter the editing state. When editing, the parameter will turn black with white text and the digit will increase/decrease when the knob is turned.

3 State: For selecting and editing parameters, 3 State works in the same way as 2 State. However, the resolution digit can be selected with the knob opposed to the < and > keys. When selected, the parameter box outline will turn blue, press to select the parameter and enter the editing state. When editing, the parameter will turn black with yellow text, indicating that the resolution selection is active, a further press will turn the parameter black with white text and the digit will increase/decrease when the knob is turned.

Press the knob a second time to return to the resolution selection state, a further press (without changing anything) will exit the parameter editing state.

8. STORE AND RECALL OF SETTINGS

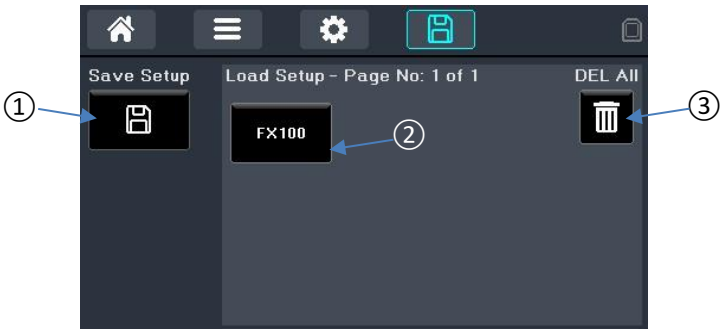

Up to 25 memories are provided that allow the user to store and recall the settings status for all outputs, including: Set Volts, Set Amps, OVP/OCP, output ON/OFF state, current meter averaging state, and the Multi-On/Multi-Off settings.

To save a setup, press the Save Setup button ①, an on-screen keyboard will appear, up to 8 characters can be added to create the file name. Press OK to save the file.

To load a setup, press the required setup button ②, a pop-up will appear asking for confirmation; press Load to recall the saved settings, Delete to delete the file or Cancel to exit the pop-up without making any changes .

NOTE

Recalling a setup will override the existing On/Off state for all settings and this should be considered when setting up the power supply prior to storing each status entry.

Pressing the DEL ALL button ③ will clear the settings memory.

9. NOTES ON OPERATION

Accuracy and Resolution

All outputs provide good accuracy and resolution and offer remote sensing to ensure precise regulation at the load. See '*Technical Specifications*' for accuracy specifications.

Remote Sense

Each output has a very low output impedance, but this is inevitably increased by the resistance of the connecting leads and the contact resistance between terminals and leads. At high currents this can result in significant differences between the indicated source voltage and the actual load voltage (two 20 milliohm connecting leads will drop 0.2V at 5A, for example).

This problem can be minimised by using short, thick, connecting leads, but where necessary it can be completely overcome by using the remote sense capability.

This requires the sense terminals to be connected to the output at the load instead of at the source by inserting wires into the SENSE terminals and connecting them directly to the load. The switch should then be set to REMOTE instead of LOCAL.

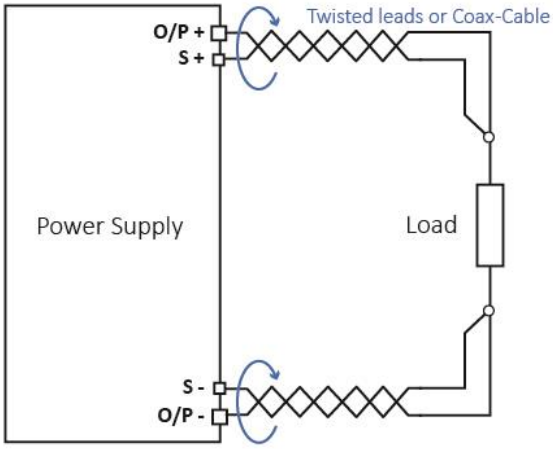

Remote Sense at point of load

To avoid instability and transient response problems, care must be taken to ensure good coupling between each output and sense lead; this can best be done by twisting the leads together. An electrolytic capacitor directly across the load connection point may also be beneficial.

The voltage drop in each output lead should not exceed 0.5 Volts. Higher voltage drops could result in small metering errors or an inability to supply full power to the load when approaching maximum voltage and current.

Parallel Wiring of Outputs

If currents above 6 amps are required, this can be achieved by wiring two or more outputs in parallel. For example, outputs 1 and 2 could be paralleled to provide 42V/12A. In this situation it would be appropriate to use voltage tracking so that the voltage can be adjusted directly on one output. See *'Voltage Tracking'* for more details.

The drawing shows a parallel connection of two outputs using local or remote sensing.

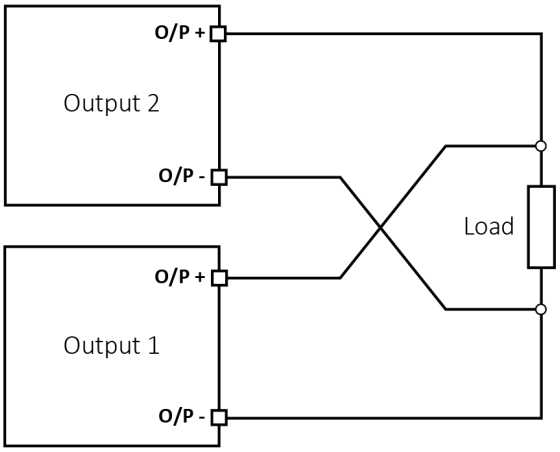

Parallel Wiring (Local Sense)

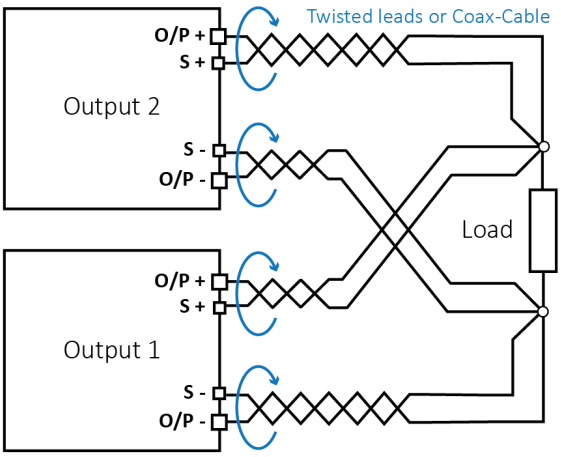

Parallel Wiring (Remote Sense)

Series Wiring of Outputs

If voltages above 42 volts are required, this can be achieved by wiring two or more outputs in series. For example, outputs 1 & 2 could be series connected to provide up to 84V.

The drawing shows a series connection of two outputs using local or remote sensing.

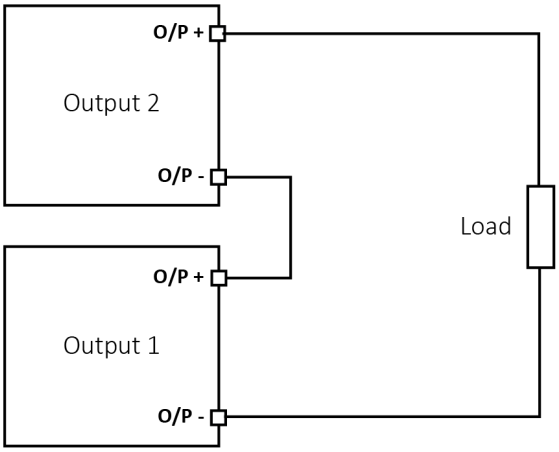

Series Wiring (Local Sense)

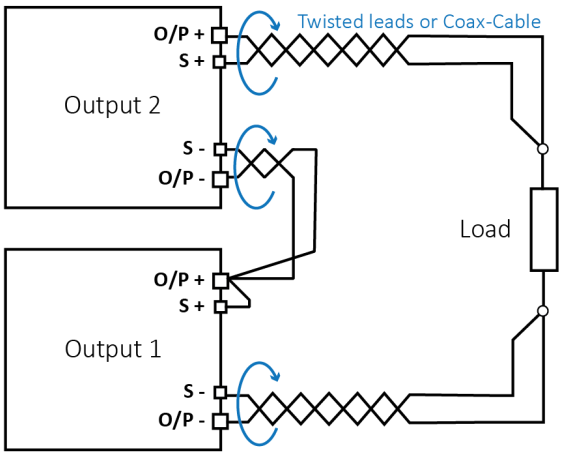

Series Wiring (Remote Sense)

WARNING

Voltages above 60Vdc are hazardous live according to EN 61010-1 and great care must be taken when using the power supply at voltages above this level.
Ensure that the exposed end of any wires are fully inserted and inaccessible to the touch.
Always make connections to the power supply with the outputs off.
See also 'Instrument Overview' Only use test leads conforming to IEC61010-031 and minimum 10A current capability.

Instantaneous Current Output

The current setting control can be set to limit the continuous output current to levels down to the milliamps. However, in common with all precision bench power supplies, a capacitor is connected across the output to maintain stability and good transient response.

This capacitor charges to the output voltage and short-circuiting of the output will produce a current pulse as the capacitor discharges which is independent of the current limit setting.

Output On/Off and Response Speed

The output On/Off control of the power supply is entirely electronic. The Off condition is achieved by setting the voltage to zero and the current level to minimum. There is no physical disconnection of the outputs.

When an output is turned on or off there is a delay between the key being pressed and the output voltage or current falling to zero (off) or rising to the set voltage or current (on).

The delay is a function of the loop response time of the power supply and of the stability capacitor which is placed across the output terminals. This capacitance has to be charged or discharged before the output can reach the set voltage or return to zero respectively.

Because bench power supplies are used primarily in CV (constant voltage) mode, the following explanation applies to CV mode. The situation for CC mode is different.

When switching on, the output will normally rise to the set value within a fixed length of time, typically a few milliseconds (see *'Technical Specifications').*

However, this time could be increased if the current setting is very low or is very close to the current required by the load. A large external capacitance at the load could also slow down the response.

When switching off with no load, the output will normally fall back to zero within a fixed length of time (see '*Technical Specifications*'). If a load is connected the response may be quicker because of the additional discharge provided by the load. However, if the load includes a large capacitance the response may be slower.

Using OVP and OCP

OVP (over-voltage protection) monitors the voltage on the output terminals and switches the output off if it exceeds the OVP setting. The response speed is typically 10ms. Control of OVP is described in '*Over-Voltage and Over-Current protection*'.

OVP might be used to guard against accidental mis-setting of the power supply or might be used to identify a fault condition when operating in constant current mode. Unlike the voltage limit setting, exceeding the OVP will turn the output off in a situation where damage to the device under test might otherwise occur.

OCP (over-current protection) monitors the current flowing at the output and switches the output off if it exceeds the OCP setting. The response speed is 25ms.

OCP might be used to guard against accidental mis-setting of the power supply or might be used to identify a fault condition when operating in constant voltage mode. Unlike the current limit setting, exceeding the OCP will turn the output off in a situation where damage to the device under test might otherwise occur.

OCP Trip at Output On

If the OCP level is set to a very low level whilst also being below the set current level, it is possible for a trip condition to be created when the output is switched on. This is caused by the current needed to charge the output capacitance. Whether a trip occurs is a function of the OCP trip response speed, the OCP level, the set current and the set output voltage.

Over-temperature Trip (OTP)

The power supply has a sensor that monitors the internal ambient temperature. Should that exceed a safe level, as might occur if the ventilation inlet or outlets are blocked, an over-temperature protection trip (OTP) will occur. Should OTP occur, all outputs will be turned off and an OTP message will appear on the screen. Normal operation can only be restored by turning the AC supply (Power) off, rectifying the ventilation problem and allowing the unit to cool before switching back on.

Also, each output module has a temperature sensor which can shut down only the affected output and display an OTP message. In this case it is possible to attempt to clear the trip condition without requiring a power cycle using the Reset soft key. If the OTP message continues to be displayed after allowing the module to cool this may be an indication of a hardware fault.

In addition, there is a temperature sensor on the power device of the PFC (power factor correction) stage. If this detects an over-temperature problem, all power outputs will shut down; the auxiliary supply for the CPU and display will, however, remain active, and the 'Hardware Failure or Over-temperature' message screen will be displayed. If poor ventilation is suspected, correct the problem, allow the instrument to cool, and use the Reset soft key to re-initialise the instrument. However, if the 'Hardware Failure or Over-temperature' message screen continues to be displayed after the instrument has cooled and been restarted, there may be a component fault; if in doubt, the unit should be returned for service.

10. REMOTE OPERATION

Remote Interface Configuration

The FX can be remotely controlled via its USB connection.

The USB interface enumerates as a Communications Class device and interacts with application software through a standard virtual COM port device driver on the PC. The instrument firmware can be updated in the field via the USB port; see *'Firmware Update'* for more details.

USB Interface

Using the USB interface for remote control requires a Communications Device Class driver on the PC to provide a virtual COM port instance.

Windows 10 and later will automatically install a suitable driver. In earlier versions of Windows, a suitable driver is provided by Microsoft, but it is not installed by default. The data (.INF) file to control the installation is provided on the website: www.aimtti.com

If required, unzip the contents of the downloaded USB driver.

NOTE

The same driver is also used by many other TTi instruments and may already be known to the PC.

Installing USB driver for the first time

To install the driver for the first time:

- First switch the unit On.
- Then connect the USB port to PC.

NOTE

In Windows 10 or later, the driver is automatically installed by the operating system.

The Windows plug and play functions should automatically recognise the attachment of new hardware to the USB interface and (possibly after searching the internet for some time) prompt for the location of a suitable driver. Follow the Windows prompts and point to the downloaded driver file named USB_ARM_VCP_xxx.INF, where xxx is a version number.

In some cases, Windows will not complete this procedure (especially recent versions which search the internet first, looking for the unique Vendor ID and Product ID), in which case the instrument will show in Device Manager as "not working properly". If this happens, select this device, right click, and choose "update driver software...", followed by: "browse this computer for driver software..."; then locate the downloaded .INF file.

Once Windows has installed the device driver it will assign a COM port number to this particular unit. This number will depend on previous COM port assignments on this PC, and it may be necessary to use Device Manager to discover it. Each instrument has a unique USB identifier which is remembered by the system, so it will receive the same COM port

number whenever it is attached to the same PC (regardless of the physical interface socket used), even though the COM port will disappear while the instrument is disconnected or switched off. Other instruments will receive different COM port numbers.

NOTE

A different PC will not necessarily assign the same COM port number to a particular instrument (it depends on the history of installations). Device Manager can be used to change the assignments given.

Remote and Local Operation

At power-on, the instrument will be in the local state and the USB icon is grey (inactive) on the Status Line. In this state, all front panel operations are possible. When the instrument receives a command from an interface the remote state will be entered, and the USB indicator will change to white (active). In this state the front panel user interface can still be navigated but no changes to parameters are possible. The instrument may be returned to the local state by pressing the LOCAL key; however, the effect of this action will only remain until the instrument receives another character from the interface, when the remote state will once again be entered. Returning to Local by this action will keep the settings at their last remotely set values.

Command Timing

There are no dependent parameters, coupled parameters, overlapping commands, expression program data elements or compound command program headers.

All commands are separate and sequential, and are executed when parsed and immediately considered complete. To provide useful functionality, the Operation Complete bit (bit 0) in the Standard Event Status Register is only ever set by the *OPC command. Either the *OPC command or the *OPC? query can be used for device synchronisation due to the sequential nature of remote operations.

Status Reporting

Error status is maintained using a set of registers; these are described in the following paragraphs and shown on the Status Model at the end of this section.

Standard Event Status and Standard Event Status Enable Registers

Any bits set in the Standard Event Status Register which correspond to bits set in the Standard Event Status Enable Register will cause the ESB bit to be set in the Status Byte Register.

The Standard Event Status Register is read and cleared by the *ESR? command. The Standard Event Status Enable register is set by the *ESE<NRF> command and read by the *ESE? command.

It is a bit field where each bit has the following significance.

Bit 7	Power On. Set when power is first applied to the instrument.
Bit 6	Not used.

Bit 5	Command Error. Set when a syntax type error is detected in a command from the bus. The parser is reset, and parsing continues at the next byte in the input stream.
Bit 4	Execution Error. Set when an error is encountered while attempting to execute a completely parsed command. The appropriate error number will be reported in the Execution Error Register.
Bit 3	Verify Timeout Error. Set when a parameter is set with 'verify' specified and the value is not reached within 5 secs, e.g., output voltage is slowed by a large capacitor on the output.
Bit 2	Not used.
Bit 1	Not used.
Bit 0	Operation Complete: Set in response to the '*OPC' command.

Execution Error Register

This register contains a number representing the last error encountered over the current interface. The Execution Error Register is read and cleared using the 'EER?' command. On power up this register is set to 0 for all interface instances.

Error messages have the following meaning:

0	No error encountered
1	Indicates a hardware error has been encountered
100	The numerical value sent with the command was too big or too small. Includes negative numbers, illegal store numbers, numbers >1 where only 0 and 1 are allowed, etc.
101	A recall of set up data has been requested but the store specified contains corrupted data. This indicates either a hardware fault or a temporary data corruption which can be corrected by writing data to the store again.
102	A recall of set up data has been requested but the store specified does not contain any data.
103	Command Invalid: The command is recognised but is not valid in the current circumstances.

Limit Event Status and Limit Event Status Enable Registers

Their purpose is to inform the controller of entry to and/or exit from current or voltage limit conditions and the history of protection trip conditions since the last read.

Any bits set in the Limit Event Status Register (LSR<N>) which correspond to bits set in the Limit Event Status Enable Register (LSE<N>) will cause the LIM<N> bit to be set in the Status Byte Register, where <N>is 1 for output1.

The Limit Event Status Register is read and cleared by the LSR<N>? command. The Limit Event Status Enable Register is set by the LSE<N><NRF> command and read by the LSE<N>? command.

Bit 7	Reserved for future use
Bit 6	Set when a fault trip has occurred which requires AC power OFF/ON to reset.
Bit 5	Set when an output sense trip has occurred
Bit 4	Set when an output over current trip has occurred
Bit 3	Set when an output over voltage trip has occurred
Bit 2	Set when output enters power limit (unregulated mode)
Bit 1	Set when output enters current limit (constant current mode)
Bit 0	Set when output enters voltage limit (constant voltage mode)

Status Byte Register

The Status Byte Register is read either by the *STB? command, which will return MSS in bit 6, or by a Serial Poll which will return RQS in bit 6.

Bit 7	Operation Status summary bit. This bit is set if any bits in the Operation Status register correspond to bits set in the Operation Status Enable register
Bit 6	Not Used
Bit 5	ESB. The Event Status Bit. This bit is set if any bits set in the Standard Event Status Register correspond to bits set in the Standard Event Status Enable Register.
Bit 4	MAV. The Message Available Bit. This will be set when the instrument has a response message formatted and ready to send to the controller. The bit will be cleared after the Response Message Terminator has been sent.
Bit 3	Error Queue is not empty. This will be set when there is one or more entries in the error queue.
Bit 2	LIM3. This will be set if any bits in the Limit Event Status register for output 3 are set and corresponding bits are set in the Limit Event Status Enable register LSE3.
Bit 1	LIM2. This will be set if any bits in the Limit Event Status register for output 2 are set and corresponding bits are set in the Limit Event Status Enable register LSE2.

Bit 0	LIM1. This will be set if any bits in the Limit Event Status register for output 1 are set and corresponding bits are set in the Limit Event Status Enable register LSE1.

10 - Remote Operation

Status Model

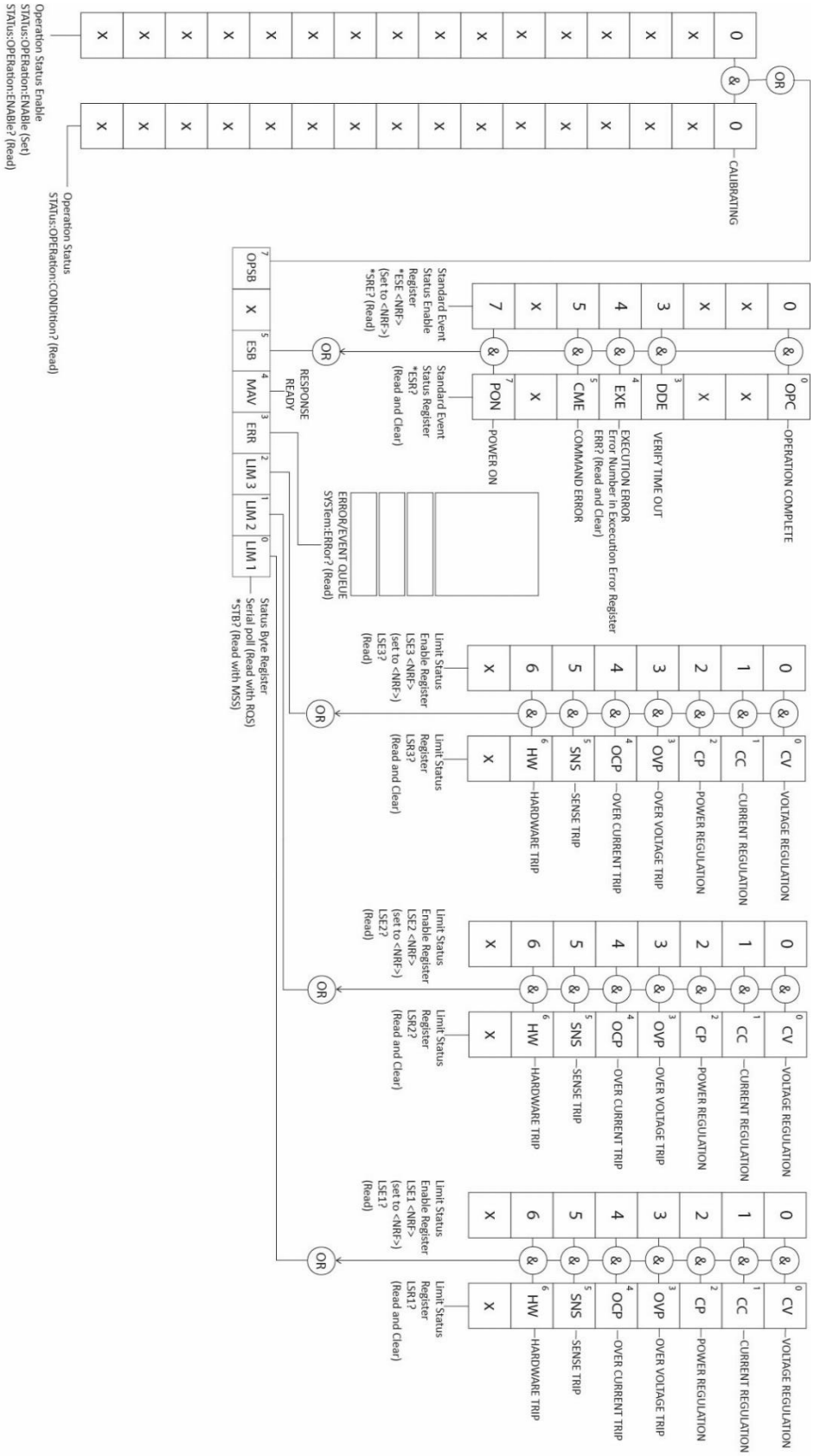

11. SCPI COMMANDS

SCPI Overview

This instrument uses SCPI (Standard Commands for Programmable Instruments) commands for remote control. The commands are based on SCPI Version 1999 and follow the syntax and rules including commands that are not taken from the SCPI standard. These commands are separated into two groups: common and subsystem.

Common commands are defined by the IEEE 488.2 standard to perform common instrument functions such as querying the status or resetting to default parameters.

Subsystem commands perform instrument specific functions and allow all operating parameters to be configured and queried. They are arranged in groups which correspond to particular functionality of the instrument. A tree structure is used extending to one or more levels below the root.

Square brackets ([ ]) are used to represent a keyword that is optional for the command. Uppercase letters are used to differentiate between the short and long form version of keywords.

EXAMPLE

The following command is used to set the voltage of any output:

[:SOURce#]:VOLTage[:LEVel][:IMMediate][AMPLitude]

When the above command is executed in the listed formats below, they all will set the voltage of output 2 to 10V.

:SOUR2:VOLT:LEV:IMM:AMPL 10
:SOUR2:VOLT:LEV:IMM 10
:SOUR2:VOLT:LEV 10
:SOUR2:VOLT 10

Removing :SOUR2 from the command will set output 1 instead of output 2.
:VOLT 10

EXAMPLE

Multiple SCPI commands can be combined into a single message using a semicolon as separator.

The combined message below will set output 1 voltage to 10 and switch the output ON.

:SOURC1:VOLT:LEV:IMM:AMPL 10;:OUTP1:STAT 1

The colon : character after ; in the above example is used to reset the SCPI parser to the root level. If the multiple commands in a single message are from the same SCPI subsystem then the colon may be omitted.

A message terminator (typically a ‘new line’ character) completes the message and resets the current path to the root.

Parameter Data Format

<NR1>	Digits with no fractional part, i.e., an integer Example: 451
<NR2>	Digits with an explicit decimal point. Example: 0.451
<NR3>	Digits with an explicit decimal point and an exponent. Example: 45.1e+01
<NRF>	A number in any format. Example: 12, 12·00, 1·2 e1 and 120 e-1 are all accepted as the number 12
<CPD>	<CHARACTER PROGRAM DATA>, i.e., a short mnemonic or string such as ON or OFF. Multiple CPDs in a command are shown as <CPD1>, <CPD2>, <CPD3>, etc.
<CRD>	<CHARACTER RESPONSE DATA> Returns a short mnemonic or string. Only the short form of the parameter is returned.
<Bool>	Boolean data. Example: 0 | 1 or ON | OFF
<Quad>	A number in dotted quad notation.
<Unquoted String>	String data without any quotation.

SCPI Subsystems

:SOURce	The SOURce subsystem contains the commands for configuring the output signal.
:OUTPut	The OUTPut subsystem configures the output signal state.
:MEASure	The MEASure subsystem returns the output voltage, current or power.
:STATus	The STATus subsystem is used to query the Operation Condition Register
:SYSTem	The SYSTem subsystem is used for a number of functions not associated with the output signal, such as configuring the USB.

Query commands

All commands (with the exception of any set in Orange) can be presented as a query command by adding '?' at the end, this will return the current set value or parameter as <…> Commands set in Blue are query only.

Status Commands

*IDN?

Returns the instrument identification. The exact response is determined by the instrument configuration and is of the form <MANUFACTURER>,<model>,0,<serial no XX-xx>>, where XX-xx is the instrument firmware version number.

*CLS

Clear Status. Clears the Status structure; this indirectly clears the Status Byte register.

*RST

Resets the instrument to the factory default settings – with the exception of all remote interface settings. These can be viewed in Factory Default Settings.

*RCL <STRING>

Recall a set up specified by <unquoted string> from the internal storage. File name could be mixture of letters and numbers but up to 8 characters long only.

*SAV <STRING>

Save the instrument set-up to a file <unquoted string> on the internal storage. File name could be mixture of letters or numbers but up to 8 characters long only.

*SRE

Sets the Service Request **Enable** Register to <NRF>

Return the value of Service Request **Enable** Register in <NR1> numeric format. The syntax of the response is <NR1>

*ESE <NRF>

Set the Standard Event Status **Enable** Register to the value of <NRF>.

Return the value in the Standard Event Status **Enable** Register in < NR1>numeric format. The syntax of the response is <NR1>

*PRE

Set the Parallel Poll **Enable** Register to the value <NRF>

Return the value in the Parallel Poll **Enable** Register in <NR1>numeric format. The syntax of the response is <NR1>

*OPC

Sets the Operation Complete bit (bit 0) in the Standard Event Status Register. This will happen immediately the command is executed because of the sequential nature of all operations.

Query Operation Complete status. The response is always 1 and is available immediately, the command is executed because all commands are sequential.

*ESR?

Query and clear the Event Status Register. The response format is <NR1>. See Status Reporting section for details of the response.

EER?

Query and clear the Execution Error Register. The response format is <NR1>. See Error Reporting section for details of the response

QER?

Query and clear **Query** Error Register. The response format is <NR1>

*STB?

Report the value of the Status Byte. Response is <NR1>

LSE1 <NRF>

Set the Limit Status **Enable** Register<N> to <NRF>

Returns the value in the Limit Status **Enable** Register. The response format is<NR1>

LSE2 <NRF>

Set the Limit Status **Enable** Register<N> to <NRF>

Returns the value in the Limit Status **Enable** Register. The response format is<NR1>

LSE3 <NRF>

Set the Limit Status **Enable** Register<N> to <NRF>

Returns the value in the Limit Status **Enable** Register. The response format is<NR1>

LSR1?

Query and clear the Limit Status Register<N>. The response format is <NR1><RMT>. See Status Reporting section for details of the response.

LSR2?

Query and clear the Limit Status Register<N>. The response format is <NR1><RMT>. See Status Reporting section for details of the response.

LSR3?

Query and clear the Limit Status Register<N>. The response format is <NR1><RMT>. See Status Reporting section for details of the response.

SYSTem Subsystem

:SYSTem:BEEPer <Bool>

Set all system buzzer settings to OFF|ON |0|1.

Query system buzzer settings. The response is 0|1.

:SYSTem:BACKLight <STRING>

Set the LCD backlight brightness to LOW|MEDium|HIGH

Query the LCD backlight brightness. Response is one of LOW|MED|HIGH

:SYSTem:POWeron <STRING>

Set the instrument power on state to DEFault|LATest

Query the instrument power on state. Response is DEF|LAT

:SYSTem:ERRor[:NEXT]?

Query the error/event queue for the oldest entry and remove it from the queue. The response is an error number followed by a description of the error. If the queue is empty the response will be 0, “No error”

:SYSTem:VERSion?

Query the instrument firmware version number.

:SYSTem:KLOCk <Bool>

Enable or disable the remote-control keyboard lock out. This disables the front panel LOCAL key when set to true. OFF|ON|0|1

:SYSTem:LOCal

Go to local operation. Any subsequent command will restore the remote state.

:SYSTem:COMMunicate:USB:VID?

Query the instrument USB Vendor ID. The response is “0x103E”

:SYSTem:COMMunicate:USB:PID?

Query the instrument USB Product ID. The response is “0x051E”

STATus Subsystem

:STATus:OPERation:CONDition?

Query the Status Operation Condition register. See Status reporting section for details. The content is not deleted after being read as it indicates the current operating status

:STATus:OPERation:ENABle <NRF>

Set Status Operation Enable Register to <NR1>

Query Status Operation Enable Register. Response is of the format <NR1>

OUTPut Subsystem

:OUTPut:ALL[:STATe] <Bool>

Turn all outputs to OFF|ON |0|1

Query if all outputs are on. Response is either 0|1

[:OUTPut]:TRACk <Bool>

Set Channel 2 to track channel 1 output. Parameters can be OFF|ON|0|1

Query the tracking state of channels 1 and 2. Response is either 0|1

[:OUTPut]:MULTi <STRING>

Set the multi on off setting to NONe|1AND2|1AND3|2AND3|ALL

***FX100DP** NONe|1AND2|ALL

Query the multi on off setting. Response is one of NONe|1AND2|1AND3|2AND3|ALL

***FX100DP** NONe|1AND2

Replace # with the output number. If no number is specified, output 1 will be selected.

:OUTPut#[:STATe] <Bool>

Set the output state to OFF|ON|0|1

Query the output state. Response is 1 or 0

SOURce Subsystem

Replace # with the output number. If no number is specified, output 1 will be selected.

[:SOURCe#]:VOLTage[:LEVel][:IMMediate][:AMPLitude] <NRF>

Set the output voltage to <NRF> NV|UV|MV|KV|MAV

Query the output voltage. Response is of the format <NR3>

[:SOURCe#]:VOLTage:VERify[:LEVel][:IMMediate][:AMPLitude] <NRF>

Set the output voltage to <NRF> NV|UV|MV|V|KV|MAV with Verification

[:SOURCe#]:CURRent[:LEVel][:IMMediate][:AMPLitude] <NRF>

Set the output current limit to <NRF> NA|UA|MA|A

Query the output current limit. Response is of the format <NR3>

[:SOURCe#]:CURRent:PROTection[:LEVel] <NRF>

Set the Over Current Protection trip point to <NRF> NA|UA|MA|A

Query the Over Current Protection trip point. Response is of the format <NR3>

[:SOURCe#]:CURRent:PROTection:TRIPped?

Query the Over Current Protection status of the unit. Response is of the format 0 if the OCP tripped has not occurred and 1 if OCP tripped has occurred.

[:SOURCe#]:VOLTage:PROTection[:LEVel] <NRF>

Set the Over Voltage Protection trip point to <NRF> NV|UV|MV|V|KV|MAV

Query the Over Voltage Protection trip point. Response is of the format <NR3>

[:SOURCe#]:VOLTage:PROTection:TRIPped?

Query the Over Voltage Protection status of the unit. Response is of the format 0 if the OVP tripped has not occurred and 1 if OVP tripped has occurred.

[:SOURCe#]:VOLTage:PROTection:CLEar

Attempt to clear the OVP trip on the channel. Also clears OCP trip.

[:SOURCe#]:CURRent:PROTection:CLEar

Attempt to clear the OCP trip on the channel. Also clears OVP trip.

[:SOURCe#]:VOLTage[:LEVel][:IMMediate]:DELTa <NRF>

Set the voltage step size to <NRF> NV|UV|MV|V|KV|MAV

Query the voltage step size. Response is of the format <NR3>

[:SOURCe#]:CURRent[:LEVel][:IMMediate]:DELTa <NRF>

Set the current step size to <NRF> NA|UA|MA|A

Query the current step size. Response is of the format <NR3>

[:SOURCe#]:VOLTage[:LEVel][:IMMediate]:INCrement

Increment the voltage by step size.

[:SOURCe#]:VOLTage[:LEVel][:IMMediate]:DECrement

Decrement the voltage by step size.

[:SOURCe#]:CURRent[:LEVel][:IMMediate]:INCrement

Increment the current by step size.

[:SOURCe#]:CURRent[:LEVel][:IMMediate]:DECrement

Decrement the current by step size.

[:SOURCe#]:VOLTage:VERify[:LEVel][:IMMediate]:INCrement

Increment the voltage by step size with verification

[:SOURCe#]:VOLTage:VERify[:LEVel][:IMMediate]:DECrement

Decrement the voltage by step size with verification

[:SOURCe]:PROTection:CLEar

Attempt to clear OVP/OCP on all channels.

MEASure Subsystem

Replace # with the output number. If no number is specified, output 1 will be selected.

:MEASure#:VOLTage?

Query the DC Voltage present on the output. Response is of the format <NR3>

:MEASure#:CURRent?

Query the DC current present on the output. Response is of the format <NR3>

:MEASure#:POWer?

Query the total power delivered by the instrument. Response is of the format <NR3>

:MEASure#:CURRent:DAMPing[:STATe] <Bool>

Set the current meter measurement averaging to OFF|ON|0|1

Query the current meter measurement averaging. Response is 1 or 0

12. MAINTENANCE

The Manufacturers or their agents overseas will provide a repair service for any unit developing a fault. Where owners wish to undertake their own maintenance work, this should only be done by skilled personnel in conjunction with the Service Guide, which may be requested directly from the Manufacturers or their agents overseas.

Cleaning

If the instrument requires cleaning use a cloth that is only lightly dampened with water or a mild detergent, to avoid damage to the case never clean with solvents.

WARNING

To avoid electric shock, or damage to the instrument, never allow water to get inside the case.

Fuse

The correct fuse type is:

6.3A (T) 250V HBC 20mmx5mm

Make sure that only fuses of the required rated current and specified type are used for replacement. The use of makeshift fuses and the short-circuiting of fuse-holders is prohibited.

To replace the fuse, first disconnect the instrument from the AC supply. Remove the 2 cover securing screws at the rear and slide back and lift off the cover. Replace the fuse with one of the correct type and refit the cover.

NOTE

The main function of the fuse is to make the instrument safe and limit damage in the event of failure of one of the switching devices. If a fuse fails it is therefore very likely that the replacement will also blow, because the supply has developed a fault; in such circumstances the instrument will need to be returned to the manufacturer for service.

Calibration

To ensure that the accuracy of the instrument remains within specification the calibration must be checked (and if necessary adjusted) annually. The procedure is detailed in the Service Guide, which also lists the calibrated test equipment required.

Firmware Update

CAUTION

Disconnect all cables from the front terminals and set sense to local before performing the firmware update.

The firmware of the instrument can be updated through the USB port using a PC software utility available from the manufacturer. This uses a HID (human interface device) USB class driver which will already be installed on any PC with a USB port.

- Connect the instrument before starting the process.
- The latest Firmware update, together with file transfer utility can be downloaded from https://www.aimtti.com/
- Once downloaded, unzip the file, and run the **File Transfer Utility** application.

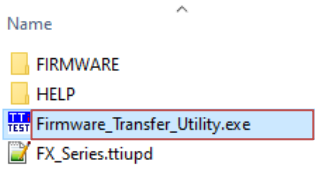

- Within the File Transfer Utility application, select **File** and **Open**.

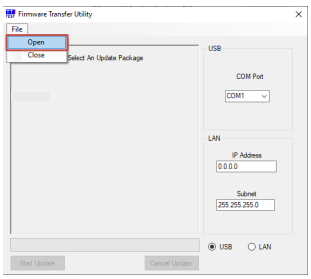

- Open the **FX_Series.ttiupd** file.

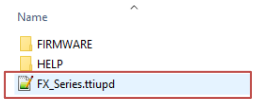

- Select **Start Update**. Once all the files have transferred successfully, a pop up will appear asking for an instrument power cycle.

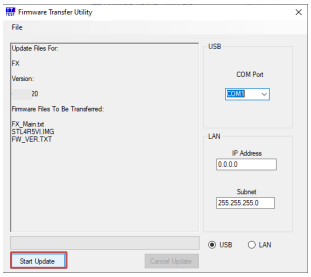

- Manually power cycle the instrument and the instrument firmware will update.

NOTE

After a Firmware update, the settings will automatically be reset to default.

12 - Maintenance

13. TECHNICAL SPECIFICATIONS

		FX100DP					FX100TP	
Number of outputs		2					3	
VOLTAGE/CURRENT/POWER LEVELS								
Voltage Range		O/P 1&2: 0V to 42V					O/P 1&2: 0V to 42V O/P 3: 0V to 6V	
Current Range		1mA to 6A						
Power per output		O/P 1&2: 105W (see Powerflex curve)					O/P 1&2: 105W (see Powerflex curve) O/P 3: 36W	
Power Range		Up to 210W					Up to 246W	
OUTPUT SETTING & CONTROL								
Output Setting		Direct entry of output voltage or current via touch control with on screen numeric keypad. Individual V & I rotary knobs for simultaneous adjustment of output voltage and current settings.						
Operating Mode		Constant voltage (CV) or constant current (CC) or constant power (CP) with automatic crossover						
Output Switch		Independent electronic switching with LED ON indication. In addition, each output key actions Multi-On and Multi-Off (if enabled from instrument menu). Output discharge by weak internal pull-down.						
Output sense		Selectable local or remote sensing.						
Setting Resolution		1mV, 1mA						
Setting Accuracy		Voltage: ± (0.1% of setting + 5mV) Current: ± (0.1% of setting + 5mA)						
Instrument Control		Instrument settings can be set using touch or V rotary knob to navigate, and press knob to confirm.						
Status Indication		Indicators for Output ON, constant voltage mode, constant current mode, remote operation, trip & error messages on display.						
OUTPUT CONNECTIONS								
Output Terminals		Front panel: Universal 4mm safety binding posts on 19mm (0.75”) spacing.						
OUTPUT PERFORMANCE								
Ripple & Noise (20MHz bandwidth)		Typically <2mV rms, <10mV pk-pk. 22mV pk-pk max for maximum load CV mode Typically<2mA rms, <10mA pk-pk. 15mA pk-pk max for maximum load CC mode						
HF Common Mode Noise (20MHz bandwidth)		Typically <4mV rms, <30mV pk-pk , 50mV pk-pk max (Into 560ohm)						
Load Regulation		For any load change within the PowerFlex envelope, using remote sense: Constant voltage (CV): <0.01% ± 5mV Constant current (CC): <0.01% ±0.5mA						
Line Regulation		For a 10% line voltage change: Constant voltage (CV): <0.01% ± 5mV Constant current (CC): <0.01% ± 0.5mA						
Transient Response		To within 100mV of setting for a 5% to 95% load change: Typically <350µsec. Maximum 375µsec.						
Voltage programming speeds				100% Resistive Load	No Load		100% Resistive Load	No Load
		17.5V/6A	UP	10ms	10ms	DOWN	10ms	160ms
		42V/2.5A	UP	10ms	10ms	DOWN	60ms	220ms
		6V/6A (OP3 only)	UP	6ms	6ms	DOWN	6ms	25ms
OUTPUT PROTECTION								
Protection Functions		Over voltage trip (OVP), Over current trip (OCP), Over temperature trip (OTP), sense miswiring trip.						
OVP	Range	O/P 1&2: 1V to 47V O/P 3: 1V to 8V						
	Resolution	100mV						
	Accuracy	0.5% ± 300mV						
	Response time	10ms						
OCP	Range	100mA to 6.6A						
	Resolution	100mA						
	Accuracy	0.5% ± 300mA						

13 - Technical Specifications

Response time	50ms
Sense trip	Monitors the voltage between the remote sense terminals and output terminals to protect against mis-wiring. Maximum drop allowed is +1.5V and -1.5V (total of 3V drop).
Over Temperature protection	Monitors internal temperature rise to protect against excess ambient temperature or blocked ventilation slots.
Output Protection	Output will withstand an applied forward voltage of up to 60V. Reverse protection by diode clamp for reverse currents up to 3A.
Temp. Coefficient	Typically <100 ppm + 0.3 (mV or mA)/°C. Maximum <200ppm/°C.

METER SPECIFICATIONS

Display Type	4.3” colour touchscreen
Voltage	Resolution: 1mV, 5 digits Accuracy: 0.1% of reading ± 5 digits
Current	Resolution: 1mA, 4 digits Accuracy: 0.1% of reading ± 5 digits
Power	Resolution: 10mW, 5 digits Accuracy: 0.2% of reading ± 7 digits
Current averaging (I avg)	User settable, sets current meter damping ON or OFF

SETTING MEMORY STORES

Store/Recall:	Store and recall voltage, current and all other output parameters from non-volatile memory (up to 25 memories).

REMOTE INTERFACES

Operational Functions	Full digital remote control facilities are available through the USB interface. Setting and readback resolutions are the same as for the Output and Meter specifications respectively.
USB Interface	Standard USB 2.0 hardware connection. Implemented as a Virtual COM Port
Remote Command Processing Time	Typically, <50ms between receiving the command terminator for a step voltage change at the instrument and the output voltage beginning to change.

GENERAL

AC Input	100V to 240V AC +/- 10%, 50/60Hz. Installation Category II
Power Consumption	360VA maximum
Operating Range	5°C to +40°C, 20% to 80% RH
Storage Range	–40°C to +70°C
Environmental	Indoor use at altitudes up to 2000m, Pollution Degree 2
Safety & EMC	Complies with EN61010-1 & EN61326-1. For details, request the EU Declaration of Conformity for this instrument via http://www.aimtti.com/support (serial number needed).
Output Isolation	150V pk to Ground
Size	214 x 140 x 300mm (WxHxD)
Weight	<4 kg

Aim & Thurlby Thandar Instruments Ltd. operates a policy of continuous development and reserves the right to alter specifications without prior notice. Accuracy specifications apply for the temperature range 18°C to 28°C after 1 hour warm-up.

14. DEFAULT VALUES

When supplied from the factory the power supply is set as follows:

Default Value PSU Params			
Parameter	OP1	OP2	OP3
Voltage	0.000	0.000	0.000
Current	1.000	1.000	1.000
OVP	47.0	47.0	8.0
OCP	6.6	6.6	6.6
Idamp	Off	Off	Off
Tracking	Disable		
Multi On/Off	Disable		

Default Values System Params	
OP Power Up state	Always off
Params Power Up state	Latest
Buzzer	On
Brightness	50%
Encoder State	2 state

The default values can be restored from the “Reset to factory Defaults” function – see *‘Reset ’*.

EXCELLENCE THROUGH EXPERIENCE

Aim-TTi is the trading name of Thurlby Thandar Instruments Ltd. (TTi), one of Europe's leading manufacturers of test and measurement instruments.

The company has wide experience in the design and manufacture of advanced test instruments and power supplies built up over more than thirty years.

The company is based in the United Kingdom, and all products are built at the main facility in Huntingdon, close to the famous university city of Cambridge

TRACEABLE QUALITY SYSTEMS

TTi is an ISO9001 registered company operating fully traceable quality systems for all processes from design through to final calibration

ISO9001:2015
Certificate number FM 20695

WHERE TO BUY AIM-TTI PRODUCTS

Aim-TTi products are widely available from a network of distributors and agents in more than sixty countries across the world.

To find your local distributor, please visit our website which provides full contact details

Designed and built in Europe by:

Thurlby Thandar Instruments Ltd.
Glebe Road, Huntingdon, Cambridgeshire.
PE29 7DR United Kingdom
Tel: +44 (0)1480 412451
Email: sales@aimtti.com
Web: www.aimtti.com

48511-1970 Issue 3